7-86

1240

NASA
Contractor Report 174710

USAAVSCOM
Technical Report 85-F-1

Review and Critical Analysis–Rolling-Element Bearings for System Life and Reliability

(NASA-CR-174710) REVIEW AND CRITICAL ANALYSIS: ROLLING-ELEMENT BEARINGS FOR SYSTEM LIFE AND RELIABILITY Final Report (Irwin (Arthur S.) Co., Inc.) 234 p HC A11/MF A01 CSCL 13I G3/37 N86-24991 Unclas 43055

R-0
7-23
9-4
11-20

Arthur S. Irwin, William J. Anderson, and William J. Derner

Arthur S. Irwin Co., Inc.
Bemus Point, New York 14712

March 1985

Prepared for
Lewis Research Center
Under Contract NAS 3-23520

NASA
National Aeronautics and
Space Administration

MAY 1986
RECEIVED
NASA STI FACILITY
ACCESS DEPT.

CONTENTS

ABSTRACT 1

INTRODUCTION 1

GENERAL DISCUSSION 5

RECOMMENDED SPECIFICATIONS 9

Specification for Ball and Cylindrical Roller Bearings 9

Specification for Rework, Refurbishment, and Restoration of Aircraft Engine and Power Transmission Cylindrical Roller and Ball Bearings 24

BEARING DATA AND LIFE ANALYSIS 37

RECOMMENDATIONS 40

APPENDICES

A - ATTENDANCE LIST, FIRST INDUSTRY COORDINATION MEETING 61

B - WRITTEN COMMENTS ON FIRST INDUSTRY COORDINATION MEETING . . 63

C - ATTENDANCE LIST, SECOND INDUSTRY COORDINATION MEETING. . . 159

D - WRITTEN COMMENTS ON SECOND INDUSTRY COORDINATION MEETING . 161

E - TYPICAL DRAWINGS WITH DATA FORMATS 215

NASA CONTRACTOR REPORT 174710

REVIEW AND CRITICAL ANALYSIS - ROLLING-ELEMENT BEARINGS FOR SYSTEM LIFE AND RELIABILITY

Arthur S. Irwin, William J. Anderson, and William J. Derner

ABSTRACT

A ball and cylindrical roller bearing technical specification which incorporates the latest state-of-the-art advancements was prepared with the fullest cooperation and participation of a broad industry committee for the purpose of improving bearing reliability in U.S. Army aircraft. An examination of current U.S. Army aviation bearing designs and applications, including life analyses, was made in preparing the specification. A bearing restoration and refurbishment specification was also prepared, with the goal of improving bearing availability.

INTRODUCTION

The work reported herein was conducted in an effort to improve both the

restoration performed by NASA and the U.S. Army Research and Development Command was reviewed (ref. 1). As with the technical specification, the full participation of the industry committee was solicited and received.

This program was conceived on a relatively simple premise: Improving the life and reliability of any component part will increase the readiness of the assembly. In addition, reducing the scatter in time-to-failure data can make possible more realistic and effective prediction of replacement needs for that component, specifically bearings.

The use of rolling-element bearings over many years in a large variety of rotating and oscillating applications provides the following advantages:

1. Predicted and actual life and scatter data, conventionally presented in acceptable, statistically compatible form. For example, bearing lives are universally displayed in the form of Weibull plots, which are based on the relationship:

$$\ln \ln 1/S = e \ln L/A$$

S = probability of survival

L = life in millions of revolutions

A = characteristic life

e = dispersion exponent (slope of Weibull plot)

Mission and utilization integrate to service life, interrupted but not terminated at overhaul. Characteristic life and dispersion data are available from test and service experience.

2. Life increases available <u>now</u>. Through the use of improved technology, ball and roller bearing lives and reliabilities have increased dramatically over the last forty years. A major factor contributing to this progress has been the instigation of technologically sophisticated efforts mounted and supported by governmental agencies and their contractors. Most programs have been focused on the rapidly increasing requirements of aircraft jet engines. Therefore, the first points of application of the new bearing technology have been in jet engines, specifically in those bearings which support the main shaft turbine-compressor rotors.

Starting in the early 1940's new developments in the making of bearing steels started coming on-stream, as shown in figure 1. These developments were triggered by proposal and acceptance of a comprehensive material specification, in this case, for AMS 6440 and AISI 52100 steel (A, fig. 1). About 1941, new heat treatment equipment became available which incorporated improved temperature controls and recorders. The use of neutral atmospheres during heat treatment practically eliminated surface decarburization (B, fig. 1).

As requirements grew, facility expansions budgeted installation of larger electric arc furnaces producing larger billets. Reducing larger billets to size for tubing or individual forgings refines grain and breaks

down the size of inclusions and segregation. This trend toward larger billets has continued, applied to various melting and remelting processes (C, fig. 1).

Major advances in melting practice evolved over a period covering 1952 to the early 1970's: About 1952, introduction of immersion thermocouples permitted better control of steel melting (D, fig. 1). Some significant manufacturing process changes were made in the 1950's. One such change which improved bearing identicity is shoegrinding (E, fig. 1). In the case of at least one ball bearing manufacturer, ball bearing races previously were ground on equipment which chucked the rings in a head which oscillated about a perpendicular axis, thus, by generation, determining the geometric center of the race. Race eccentricity and wobble (face runout) became functions of the condition of the chucking surfaces, and equipment wear and dirt produced increasing bearing inaccuracies.

This arrangement was superceded by equipment in which the parts are supported by shoes contacting the cylindrical outside diameters of the bearing rings. They are pulled into the shoes and rotated by a magnetic plate turning about a center slightly offset from the center of the rings as fixed by the shoes. With this concept, it is practically impossible to grind eccentricity and face runout into the parts, and the transverse radii of the races, controlled by the grinding wheel dresser, are more consistent.

Vacuum melting reduces the quanitity and alters the type of inclusions and trace elements present in the steel, as well as releasing entrapped gases. When vacuum induction melted (VIM) electrodes are vacuum arc (CEVM or VAR) remelted, the resulting material (VIM-VAR) is cleaner and more segregation-free than that produced by VIM alone (F, fig. 1). Also, nondestructive testing, using eddy current and ultrasonic methods, was applied to billets, bars, and tubing (G, fig. 1). In this time period, vacuum degassing of molten steel in the ladle drastically reduced oxide type inclusions, even in standard bearing material (H, fig. 1).

Moving along into the 1960's, we find argon atmosphere protection of the molten steel during teeming (I, fig. 1).

Prior to the 1950's as-ground races were hand polished to improve finish and appearance. Overly-aggressive polishing could create a thin layer of plastically displaced or smeared material which was softer and therefore more prone to fatigue failure. This manual process was replaced by mechanized honing in which all parts are smoothed in a more uniform manner (J, fig. 1). These and similar developments led to improved product consistency, permitting quality control by process controls and audits and reducing human element variability (K, fig. 1).

Based on experience gained with higher temperature bearing applications, bearing designs trended toward increased internal clearances to reduce the possibility of abusive internal loading, such as by excessive radial or axial preloading distortion, and cage designs were modified to accomodate more precession of the rolling elements, such as promoted by misalignment.

Although laboratory life-testing reflected the trend toward increased lives even before 1959, it was in 1968 that ball bearing catalogs were changed to triple calculated L_{10} lives (fig. 1).

The interdependent, stepping-stone progression, with each improvement clarifying a cause-and-effect relationship, finally reduced failures due to gross material defects or geometric variations, permitting identification of different mechanisms of bearing deterioration and study of the causes of these initiatory failure modes. As a "state-of-the-art" report, under the auspices of the ASME, a design guide was made available in 1971, permitting refined life calculations incorporating the effects of some of the variables listed previously (ref. 2). The life calculation refinements are invoked as a series of factors reflecting material composition, melting practice, heat treatment, hardness, lubrication (including elastohydrodynamic effects), speed of operation, and mounting misalignment.

In 1979 NASA summarized the chronological increase in relative bearing life over the period with which we are concerned for aircraft turbine engine bearings (ref. 3). This progression is also shown in figure 1 for premium material. The factors accredited for the life increases indicated are defined as "NASA Applied Technology" and listed as:

Race and Ball Hardness

Surface Finish

Design

Lubrication

Material

Fiber Orientation

The potential for lives as high as 100 times the AFBMA rated lives was recognized (ref. 4).

3. Failure modes identifiable and predictable from computerized analysis. The first use of digital computers for the analysis of bearings, in 1959, can be credited to A. B. Jones (ref. 5). Improving on a tedious tabular method, this program predicted ball motion based on a hypothesis concerning kinematic behavior. Progressively this relatively simple concept was expanded by Jones (ref. 6) and others to include gyroscopic moments as well as lubricant effects including pressure and temperature dependent viscosity factors. Around 1966 a cylindrical roller bearing analysis appeared, followed by separate competitive refinements which are still being pursued. Some of the more recent analyses and resulting computer programs are given in refs. 7 to 12. These computer programs may be used for various purposes, from initial bearing selection to post-mortems. Since they recognize the significance of design, metallurgy, and metrology, as well as speeds, loads, and lubrication, they serve well to critique many facets of bearing applications and permit optimization thereof.

For example, the ratio of lubricant film thickness to surface roughness is critical to life, up to some value. Above this value, increasing the ratio does not help; life is then a function of some other factor, such as material properties. If the ratio of film thickness to surface roughness is marginal, a need to reduce bearing and/or lubricant temperature is

indicated. This increases oil viscosity and thereby increases oil film thickness. If it is impractical to reduce temperatures, improving race and rolling-element finishes may raise the ratio out of a critical range. Improvements in surface finish were investigated as a means for life improvement of some of the critical bearings for which life analyses are reported herein. The Specification for Ball and Cylindrical Roller Bearings lists, under Drawing Requirements, the data required as inputs to the computer to generate information on such critical criteria.

4. Basic material quality monitored by accepted sophisticated procedures.

5. Manufacturing controls in place, including quality data acquisition and retention, traceability, and permanent product identification.

6. Life test data available on effect of parts replacement from reinspected and reworked stocks.

Thus it can be seen, as reflected in figure 1, that dramatic improvements in rolling-element bearing technology have been instituted over the past four decades. Anything less than full implementation of this bearing technology in critical applications such as U.S. Army aircraft would seem to be remiss.

The authors wish to express their gratitude to TSARCOM for their sponsorship of the program, and to acknowledge the valuable support and insights provided by Messrs. Harold H. Coe and Erwin V. Zaretsky of the Bearing, Gearing, and Transmission Section, NASA Lewis Research Center, Mr. Gilbert J. Weden of the Propulsion Laboratory, AARTL, and Mr. Martin Joseph, TSARCOM. We further wish to thank those individuals and organizations who contributed and participated in this work.

GENERAL DISCUSSION

The Arthur S. Irwin Co. was under contract with the NASA Lewis Research Center under sponsorship of the U.S. Army Troop Support and Aviation Materiel Readiness Command (TSARCOM) to improve both the reliability and the availability of ball and cylindrical roller bearings used in U.S. Army aircraft. To accomplish this, the following work was performed in accordance with the contractual statement of work:

A. An analysis of designs and applications of certain ball and roller bearings in current usage in Army helicopters, including those in critical supply.

B. A life and performance analysis with recommendations for possible redesign of the bearings, incorporating the newest rolling-element bearing technology.

C. Development of a rolling-element bearing technical specification (Specification for Ball and Cylindrical Bearings) specifically oriented to the requirements of the U.S. Army Aviation Systems Command. This specification incorporates currently approved design and indicates material, manufacturing, and other technology which would improve life, reliability, and/or performance of the bearings.

D. Preparation of a rolling-element bearing refurbishment and restoration technical specification, specifically oriented to the requirements of the U.S. Army Aviation Systems Command.

These specifications are in a form which assists Army purchasing personnel in obtaining replacement bearings, some of which are currently purchased only from prime contractors.

Pursuing A above, data packages on some 44 bearings were obtained from TSARCOM and critical data tabulated. Table 1 presents the results of this effort. Using these data, an analysis was performed as described in the Bearing Analysis section included later in this report.

In accordance with the Contract Work Statement, these specifications, in their progressive drafts from first to final, were coordinated and reviewed with the aerospace bearing industry who specifically manufacture bearings as prime contractor or subcontractor for the Army Aviation Systems Command, helicopter manufacturers, and the aircraft and aircraft engine manufacturers who manufacture aircraft and/or aircraft engines for the U.S. Army.

In addition to transmittal of material by mail, two meetings of the representatives were held, followed by submittal of written comments. Appendix A lists attendees and appendix B lists comments received from the First Industry Coordination Meeting. Appendix C lists attendees and appendix D lists comments received from the Second Industry Coordination Meeting.

From the first Industry Coordination Meeting, there was unanimous agreement among the industry representatives that the prime contractors and first level subcontractors must play a part in determining the specifications and enforcement procedures to be applied using their data in current use or as developed.

Industry representatives saw no obstacles to making such data available and strongly recommended continuing use of the prime contractor's specifications, as well as vendor approval/quality control and drawing control procedures.

The position taken by the industry representatives was recognized and adopted for this project even though it differed from the previous program intention. Basically and briefly, their position was that the prime contractors should continue to provide the main channels for selection, direction, and surveillance of the manufacturers and vendors of the bearings, and this was extended to include those engaged in bearing rework.

The program activity was then and therefore shifted from that of creating a comprehensive specification to replace the systems of communication and control existing between the prime contractors and their vendors to specifications which take advantage of the existing channels for flow of technical and contractual information, as well as surveillance and control. Authority for application or delegation of enforcement of requirements has been extended to include cognizant government agencies. Since these systems have developed over some years, the various prime contractor/vendor working arrangements have become unique and diverse.

Finding common ground required, in addition to the second Industry Coordination Meeting, progressive revisions of the specifications.

After this series of revisions, the specifications were finalized by TSARCOM. In the preparation of these specifications, present prime contractor practices, drawings, specifications, and procedures were referenced. However, these specifications permit the identification of the characteristics to be upgraded to achieve the performance improvements indicated earlier in this report.

Review of prime contractors' bearing drawings revealed wide diversity and even inadequacy in defining requirements in bearing geometry, metrology, and applicable specifications. In most cases, bearings could not be quoted or manufactured from prime contractors' drawings alone. Our specification lists the characteristics needed and the specifications to be referenced by public or prime contractors' designations. The only exceptions to complete information needed by a vendor to permit quoting, producing, and shipping bearings deal with packaging requirements, which are usually covered in the Purchase Orders since they may vary for identical bearings from order to order. In addition, since bearing technology includes analytical evaluations, data required for such analyses are included in the drawing requirements listed in the specification. The technical Specification for Ball and Cylindrical Roller Bearings is included in the Recommended Specifications section.

To demonstrate the use of this section of the specification, a drawing format was constructed and data from four General Electric Co. drawings were transferred to this format. While most of the data requirements were thereby satisfied, some could not be translated from the GE drawings as presently prepared. These are included herewith as appendix E.

Practically all the requirements of the technical Specification for Ball and Cylindrical Roller Bearings apply to bearings processed under the specification "Rework, Refurbishment, and Restoration of Aircraft Engine and Power Transmission Cylindrical Roller and Ball Bearings," which is included in the Recommended Specifications section.

In the Industry Coordination Meeting on 24 January 1983, Dr. James F. Dill (AFWAL/POSL) presented information on activities of the Tri-Service Committee on Bearing Rework. From their material, three documents were adopted which pertain to our proposed Rework, Refurbishment, and Restoration processing: MIL-B-58105, NAVAIR 01-1A-503, and NAVAIR 02-1-517. Again industry representatives recommended continuing use of prime contractor's specifications, subcontractor approval, and quality assurance procedures, including drawing controls. In our specification, authority for application or delegation of enforcement of requirements, or portions thereof, has been extended to include cognizant government agencies.

This specification addresses four progressive process provinces or levels by which bearings may be returned to operational status:

Level I. - Processing bearings involves inspecting a used bearing, checking/comparing it to new bearing requirements. This process involves:

a. Demagnetization

b. Cleaning

c. Nondestructive testing

d. Visual/microscopic inspection

e. Minor repair: buffing and polishing of inactive and active surfaces, stoning of nicks and gouges in corner radii

f. Dimensional inspection

g. Reassembly (to include retainer rivetting or snap-in retention)

h. Dynamic testing (if required): rotation of bearing rings to permit evaluation of noise level, torque characteristics, and/or similar functional parameters

i. Lubrication/preservation - as covered in the purchase order

Level II. - Refurbishment of bearings is rework of bearings that goes beyond the scope of Level I Processing. This encompasses all of the operations of Processing plus one or more of the following:

a. Replace rolling elements

b. Rework/replace retainers

c. Interchange of used components and/or substitution of new components to create a different assembly identity

d. Grinding and/or plating of mounting surfaces as necessary to return to original drawing dimensions

e. Honing (superfinishing) of raceways (not to exceed .0003 inches total metal removal per surface)

Level III. - Restoration of bearings involves the removal of material by a grinding operation. This term encompasses all of the operations of Level I Processing and Level II Refurbishment plus one or more of the following:

a. Grinding of raceways - up to .003 inches per side

b. Installation of oversize rolling elements

c. Installation of original or replacement retainer when required

Level IV. - Remanufacturing of bearings involves rework of bearings where new components beyond the rolling elements are manufactured. This term encompasses all of the operations of processing and may involve those of either refurbishing or regrinding on the old parts which are reused and one or more of the following:

a. Manufacturing of a new raceway

b. Manufacturing of a new retainer

After a series of revisions to incorporate suggested improvements, this specification was finalized by TSARCOM.

RECOMMENDED SPECIFICATIONS

Specification for Ball and Cylindrical Roller Bearings

1. Scope: This specification covers the requirements for the qualification and procurement of gas turbine engine mainshaft and propulsion power train rolling-element bearings. At the discretion of the cognizant military authority, the specification may also be applied to those bearings in critical supply.

2. Applicable Documents, when and as referenced in applicable drawings and other control documents: Use latest versions in effect at date of contract.

2.1. Specifications

2.1.1. Specifications specifically referenced in body of this Specification for Ball and Cylindrical Roller Bearings

AMS-2251	Tolerances, Low Alloy Steel Bars
AMS-2253	Tolerances, Carbon and Alloy Steel Tubing
AMS-2259	Chemical Check Analysis Limits
AMS-2300	Premium Aircraft - Quality Steel, Cleanliness, Magnetic Particle Inspection Procedure
AMS-2310	Qualification Sampling of Steels, Transverse Tensile Properties
AMS-2350	Standards and Test Methods
AMS-2375	Control of Forgings - First Article Inspection
AMS-2410	Plating-Silver, Nickel Strike, High Bake
AMS-2412	Plating-Silver, Copper Strike, Low Bake
AMS-2808	Identification, Forgings
AMS-4616	Bars, Forgings, and Tubing
AMS-5749	VIM-VAR BG-42
AMS-6265	VIM-VAR AISI 9310 (carburized)
AMS-6276	Steel Balls, Forgings, and Tubing (8620)

AMS-6414	Bars, Forgings, and Tubing
AMS-6415	Bars, Forgings, and Tubing
AMS-6419	Bars, Forgings, and Tubing
AMS-6444	CEVM AISI 52100 Bars, Forgings, and Tubing
AMS-6490	Bars, Forgings, and Tubing
AMS-6491	VIM-VAR AISI M-50
ASTM A 535	Specifications for Special Quality Ball and Roller Bearing Steel

2.1.2. Supportive Specifications referenced in those specifications listed in 2.1.1.

AMS-2404	Plating-Nickel Electroless
AMS-2418	Plating Copper
AMS-2430	Shot Peening
AMS-2526	Coating, Thin Lubricating Film, Molybdenum Disulfide Impingement Applied
AMS-6275	Steel Balls, Forgings, and Tubing - .4Cr, .45Ni, .12Mo, .0003B (.15-.20C)
AMS-7225	Rivets - Steel, Carbon
AMS-7226	Steel - Austenitic, Corrosion Resistant (18Cr, 9Ni)
MIL-B-197	Bearings, Antifriction, Associated Parts and Subassemblies, Preparation for Delivery of
MIL-C-11796	Corrosion Preventive Compound, Petroleum, Hot Application
MIL-H-6875	Heat Treatment of Steels (Aircraft Practice), Process for
MIL-I-6866	Inspection, Penetrant Method of
MIL-I-6868	Inspection Process, Magnetic Particle
MIL-I-45208	Inspection System Requirements
MIL-L-7808	Lubricating Oil, Aircraft, Turbine Engine, Synthetic Base NATO code Number O-148
MIL-L-23699	Lubricating Oil, Aircraft Turbine Engine Synthetic Base
MIL-Q-9858	Quality Program Requirements
QQ-C-320	Federal Specification Chromium Plating (Electro-deposited)

AMCP-706-203	Engineering Design Handbook - Helicopter Engineering Part Three - Quality Assurance

2.2. Standards

2.2.1. Standards specifically referenced in body of the Specification for Ball and Cylindrical Roller Bearings

ASTM A 604	Macroetch Testing of Consumable Electrode Vacuum Arc Remelted Steel Bars and Billets
ASTM B 350	Standard Methods for Chemical Analysis of Carbon Steel, Low Alloy Steel, Silicon Electrical Steel, Ingot, Ingot Iron, and Wrought Iron
ASTM B 584	Standard Specification for Copper Alloy Sand Castings for General Applications
ASTM E 18	Tests for Rockwell Hardness and Rockwell Superficial Hardness of Metallic Materials
ASTM E 45	Inclusion Ratings - Jernkontoret Charts
ASTM E 59	Sampling Steel and Iron for Determination of Chemical Composition
ASTM E 112	Standard Methods for Estimating the Avg. Gr. Sz. of Metals
ASTM E 588-76	Detection of Forge Inclusions in Bearing Quality Steel by the Ultrasonic Method
ANSI B 46.1	Surface Texture (Surface Roughness, Waviness, and Lay)
ANSI Y 14.5	Dimensioning and Tolerancing for Engineering Drawings
MIL-STD-045662	Traceability to NBS Standards
MIL-STD-143	Standards and Specifications, Order of Precedence for the Selection of
MIL-STD-1520	Corrective Action and Disposition System for Nonconforming Material
MIL-STD-1535	Supplier Quality Assurance Program Requirements
MIL-STD-271	Nondestructive Testing Requirements for Metals
MIL-STD-880	Engineering Drawing Practices
MIL-I-45208	Inspection System Requirements
MIL-I-6868	Inspection Process, Magnetic Particle
MIL-H-6875	Heat Treatment of Steels (Aircraft Practice) Process for

DOD-STD-100 Engineering Drawing Practices

2.2.2. Supportive Standards referenced in those standards listed in 2.2.1.

MIL-STD-129 Marking for Shipment and Storage

3. Qualification/Certification - Sources for bearing procurement must be qualified by the original contractor, by dynamic testing, or by quality audit.

In lieu of testing of the specific bearing procured, qualification may be based on prior testing of another bearing size of similar material, type, and family produced by the manufacturer using current processes.

Bearings procured by other than the prime contractor shall be permanently marked to indicate name of procurement activity, as well as other markings required to ensure traceability.

3.1. Requalification Requirements - On those bearings for which a new facility is to be utilized, or for which a significant process or design change is intended, requalification is required. The cognizant authority may conduct the qualification by testing or quality audit, or may delegate this responsibility.

3.2. Recertification Requirements - On those bearings which have been out of production for four years or more, recertification of processes and standards by the original/prime contractor is required. As an alternative, the cognizant government authority may perform the recertification.

4. Inspection - Inspection of assemblies and components shall be conducted in accordance with negotiated quality plans which shall include record requirements.

4.1. Inspection Details - First article inspection details shall be recorded and maintained as a permanent record. Subsequent inspection requirements shall be per the quality plan.

5. Rejection - All components and assemblies which are rejected may be identified and held for Quality/Material Review Board action. Those components which may be reworked shall be rerouted at the discretion of the manufacturer, providing the original drawing requirements are met. Assemblies may be disassembled and reassembled providing this is accomplished in accordance with the negotiated Quality Control Plan.

6. Change Control - There may be no significant change to the original design, material, tolerances, basic process, quality control plan, heat treat, post heat treat, or rework procedures without prior approval of the original contractor or the cognizant government authority. "Significant" is to be defined by the procurement agency.

6.1. Change Control Approval - Any request for change shall be the responsibility of the vendor to submit and obtain approval prior to the initiation of work on the contract.

7. Process and Inspection Approval - All process operations and inspection procedures will be evaluated and confirmed by the original equipment manufacturer or the cognizant government authority or his delegated representative to ensure compliance with currently accepted aerospace industry standards. This will include all destructive and nondestructive methods and Quality Control Plans and inspection methods.

7.1. Process and Inspection Changes - These shall be requested and approval pursued as stated in paragraph 6, with the exception that processing may continue, verbal approval having been granted. It shall be the responsibility of the vendor to provide documentation in each such instance.

8. Drawing Requirements - Drawings shall be in accordance with DOD-STD-100 and MIL-STD-880 and shall contain the information listed in the following paragraphs. Where existing drawings are incomplete, they may be supplemented to include the following data: bearing usage(s), qualified sources, change numbers, bearing installation, and operating data necessary for analysis of the bearing as applied, etc. Separate sections may be utilized to define design and include process data and details to be covered by Quality Control requirements.

8.1. General Bearing Requirements, where specified

8.1.1. Type of bearing

8.1.2. Bore

8.1.3. OD

8.1.4. Width

8.1.5. Pitch diameter

8.1.6. AFBMA class

8.1.7. Size and number of rolling elements per row

8.1.8. Number of rows of rolling elements

8.1.9. Description of details for special mounting or removal procedures such as puller grooves, retention, etc.

8.1.10. Radial clearance (total) and gage load for determining radial clearance

8.1.11. Diametral clearance for retainer to piloting ring land

8.1.12. Retainer overall width, (max.)

8.1.13. Retainer bore to O.D. concentricity

8.1.14. Retainer land width

8.1.15. Pilot ring locating diameter concentricity to pilot land

8.1.16. Rolling element to retainer pocket clearance

8.1.17. Ball or roller drop (max.)

8.1.18. Minimum clearance between rolling element and cage to be measured with rolling element and cage positioned in a simulated operating position to produce the closest approach between rolling element and the cage retention feature

8.1.19. Retainer material condition and hardness

8.1.20. Retainer plating required and thickness per AMS-2412 or AMS-2410

8.1.21. Surface finish roughness (A-A) rolling contact surfaces

8.1.22. Surface roughness (A-A) for mounting surface

8.1.23. Surface finish roughness (A-A) for retainer pockets and retainer piloting surfaces

8.1.24. Lobing, waviness, and chatter tolerances applicable to bearing bore and outer diameter

8.1.25. Surface treatments or coatings required

8.1.26. Assembly cross-corner dimensions as required

8.1.27. Flushness requirements (where applicable)

8.1.28. End play or end float limits (max.) and gage load for each play check

8.1.29. Material for rings and rolling elements

AMS 6491	VIM-VAR AISI M-50
AMS 6444 *	VIM-VAR AISI 52100
AMS 6276	CEVM AISI 8620 (carburized)
AMS 6265 *	VIM-VAR AISI 9310 (carburized)
AMS 5749	VIM-VAR BG-42 (440-c modified)

* Finalized specification not currently available.

8.1.30. Special heat treatment required to include details of microstructure and retained austenite requirements

8.1.31. Surface hardness, as required, at operating temperatures:

AMS 6491 Rc 60 (min.)

AMS 6444	Rc 58 (min.)
AMS 5749	Rc 60 (min.)

8.1.32. Bearing operating temperature range and stabilization temperature required to ensure against excessive growth of elements or undesirable transformation products, including retained austenite:

Material	Retained Austenite (max.)
AMS 6491	2 percent
AMS 6444	2 percent
AMS 5749	5 percent
AMS 6276 and AMS 6265	5 percent

8.1.33. Required verification of bearing material procurement, inspection, and evaluation requirements to ensure cleanliness, grain control, and sufficiency of working after the ingot is formed to provide the documentation for traceability. (Paragraph 10)

8.1.34. Identification requirements

8.1.35. Requirements for nital etch staining to be removed from specific surfaces, where applicable

8.1.36. Inner ring high point to be identified, if required

8.1.37. Grain orientation angle limit for rings (See 8.3.8.)

8.2. Cylindrical Roller Bearing Requirements - In addition to the general requirements listed in paragraph 8.1., the following are required for cylindrical roller bearings, where specified:

8.2.1. Roller roundness

8.2.2. Roller diameter and length, nominal

8.2.3. Roller crown radius to crown drop coordinates

8.2.4. Roller flat length and centrality

8.2.5. Roller end squareness

8.2.6. Roller corner radius runout with respect to roller cylindrical section, if required

8.2.7. Roller to flange, end clearance

8.2.8. Flange height and layback angle

8.2.9. Roller corner dimensions

8.2.10. Roller end finish (A-A)

8.2.11. Cage balance tolerance and balancing speed, if required

8.2.12. Diameter and length variation within one roller set

8.2.13. Requirement, if any, for roller complement to be retained in the cage when removed from its associated ring

8.3. Ball Bearing Requirements: In addition to the general requirements listed in paragraph 8.1., the following are required for ball bearings where specified:

8.3.1. Contact angle, unmounted; gage load for measuring

8.3.2. Inner-ring groove radius as a percentage of ball diameter

8.3.3. Outer-ring groove radius as a percentage of ball diameter

8.3.4. Runout of split-ring contact face with respect to the bore of the split ring, if required

8.3.5. Ring groove diameter and tolerance, if required

8.3.6. Maximum step at race split

8.3.7. Ball grade and ball complement diameter variation

8.3.8. Ring grain orientation to be substantially parallel to groove surfaces, if required (may be negotiated)

8.3.9. Cage balance limit and balancing speed range; diameter for locating during balancing, if required

8.3.10 Identification required to ensure alignment and load sharing of matched sets of multi-row bearings

8.3.11. Bearing preload, if applicable

8.4. Data for Engineering Reference

8.4.1. Operating spectrum

8.4.1.1. Flight condition

8.4.1.2. Percent time

8.4.1.3. Bearing Speed (r.p.m.)

8.4.1.4. Load - axial

8.4.1.5. Radial

8.4.1.6. Temperatures

8.4.1.6.1. Inner race and adjacent mating parts

8.4.1.6.2. Outer race and adjacent mating parts

8.4.1.6.3. Rolling elements

8.4.1.6.4. Lubricant - oil-in

8.4.1.6.5. Oil-out

8.4.2. Mounted bearing radial clearance

8.4.2.1. At room temperature

8.4.2.2. At operating temperature

8.4.3. Shim angle (or equiv.)

8.4.4. Shim thickness, used when grinding split ball bearing rings (or equiv.)

8.4.5. Race depths (percent ball dia.)

8.4.6. Cage pocket detail dimensions

8.4.6.1. Circumferential

8.4.6.2. Axial

8.4.6.3. Radial height, min.

8.4.7. Diametral clearance for retainer to non-piloting ring

8.4.8. Cage piloting surfaces effective width

8.4.9. Designated lubricant: If lubricant is nonstandard, the following data is required:

8.4.9.1. Pressure viscosity coefficient at 100 °F and 210 °F

8.4.9.2. Density at 60 °F

8.4.9.3. Thermal conductivity

8.4.9.4. Thermal expansion

8.4.10. Notes:

8.4.10.1. Where practical, retainer shall be designed to permit removal of rolling elements from the rings without cutting or bending tangs. The rolling elements shall be retained in the retainer by a "snap-in" configuration.

8.4.10.2. Rolling elements shall be harder than the rings by one of two points, Rockwell "C" (if specified).

9. Inspection Processes - All inspection methods and processes must be approved and certified by the prime contractor.

9.1. Inspection Methods and Processes to be approved (as required)

9.1.1. Hardness, heat treatment verification, metallurgical test results, and austenite determination

9.1.2. Decarburization determination, including allowable decarburization on noncritical surfaces

9.1.3. Grinding burn detection and evaluation

9.1.4. Magnetic particle inspection

9.1.5. Surface defect examination and evaluation (visual and fluorescent penetrant)

9.1.6. Ultrasonic inspection for subsurface defects

9.1.7. Eddy current inspection

9.1.8. X-ray diffraction inspection

9.1.9. Surface texture evaluation and control

9.1.10. Plating process control and verification

9.1.11. Coating process control and verification

9.1.12. Peening process control and verification

9.1.13. Quality control verification and traceability

9.2. Inspection Standards

9.2.1. Standards of acceptance for all inspection processes to include dimensional masters traceable to the National Bureau of Standards or proved equal in control and verification to industry standards, using MIL-STD-45662 certification document

10. Material - Rings and Rolling Elements

TYPE: HIGH CARBON, HIGH SPEED, CORROSION RESISTANT AND CARBURIZING STEELS, VACUUM INDUCTION MELTED AND VACUUM ARC REMELTED MATERIAL FOR BALL AND ROLLER BEARINGS

10.1. Scope

10.1.1. This specification covers forgings, forging stock, tubing, bars, rods, and coils to be used in the manufacture of high quality ball and roller bearings.

10.2. Process:

10.2.1. The steel/electrode may be produced employing vacuum induction melting process during initial melting, followed by remelting employing vacuum arc remelting (consumable electrode) process. The initial electrode may be both melted and cast under vacuum.

10.2.2. For manufacture of bearings in this category, the bearing supplier shall purchase, control, and test raw material to this specification and provide certification thereto.

10.3. Referenced Specifications: The following documents are integral parts of this specification. (Use latest issue in effect at time of issuance of procurement contract for each.)

10.3.1. Aerospace Material Specifications:

AMS-2251	Tolerances, Low Alloy Steel Bars
AMS-2253	Tolerances, Carbon and Alloy Steel Tubing
AMS-2259	Chemical Check Analysis Limits
AMS-2300	Premium Aircraft - Quality Steel, Cleanliness, Magnetic Particle Inspection Procedures
AMS-2310	Qualification Sampling of Steels, Transverse Tensile Properties
AMS-2350	Standards and Test Methods
AMS-2375	Control of Forgings - First Article Inspection
AMS-2808	Identification, Forgings
AMS-4616	Bars, Forgings, and Tubing
AMS-6414	Bars, Forgings, and Tubing
AMS-6415	Bars, Forgings, and Tubing
AMS-6419	Bars, Forgings, and Tubing
AMS-6444	CEVM AISI 52100 Bars, Forgings, and Tubing
AMS-6490	Bars, Forgings, and Tubing
AMS-6491	VIM-VAR AISI M-50

10.3.2. American Society for Testing and Materials

ASTM E 18	Tests for Rockwell Hardness and Rockwell Superficial Hardness of Metallic Materials

ASTM E 59	Sampling Steel and Iron for Determination of Chemical Composition
ASTM E 112	Standard Methods for Estimating the Avg. Gr. Sz. of Metals
ASTM E 350	Standard Methods for Chemical Analysis of Carbon Steel, Low-Alloy Steel, Silicon Electrical Steel, Ingot, Ingot Iron, and Wrought Iron
ASTM E 588-76	Detection of Forge Inclusions in Bearing Quality Steel by the Ultrasonic Method
ASTM A 535	Specifications for Special Quality Ball and Roller Bearing Steel
ASTM A 604	Macroetch Testing of Consumable Electrode Vacuum Arc Remelted Steel Bars and Billets

10.3.3. Government Standards

MIL-STD-143	Standards and Specifications, Order of Precedence for the Selection of
MIL-STD-271	Nondestructive Testing Requirements for Metals
MIL-H-6875	Heat Treatment of Steels (Aircraft Practice), Process for
MIL-I-6868	Inspection Process, Magnetic Particle
MIL-I-45208	Inspection System Requirements
ANSI B46.1	Surface Texture (Surface Roughness, Waviness, and Lay)

10.4 Chemical Composition

10.4.1. The steel shall conform to the requirements as established in applicable AMS standards

10.4.2. A chemical analysis shall be obtained and reported for the master heat for all elements listed in Paragraph 10.4.1. In addition to the heat analysis, each remelt ingot shall be analyzed for carbon and manganese.

10.4.3. Check analysis may be made by the purchaser in accordance with the latest revision of ASTM 59 and AMS 2259 with the exception that check limits for carbon content shall be controlled to assure desired hardenability (-.01 to +.03).

10.5. Form and Condition - To perform immersion ultrasonic tests, the M-50, 52100, and BG-42 materials shall be furnished in annealed and centerless ground or turned condition and the carburizing grades in normalized or tempered condition, with a maximum hardness suitable for finishing to 125 microinch RMS maximum.

10.6. Quality Tests

10.6.1. Material shall be uniform in quality and condition, clean, sound, and free from foreign materials and from surface and internal defects detrimental to fabrication or to performance of parts. The material shall have uniform macrostructure and grain flow.

10.6.2. The manufacturer shall be held responsible for the quality of the material being furnished and shall make the necessary tests to ensure this quality.

10.6.3. Magnetic Particle Stepdown Test (if not ultrasonically tested)

10.6.3.1. Specimens shall be taken from 4 inch square billets representing the top and bottom of each ingot.

10.6.3.2. Specimens shall be inspected in accordance with AMS 2300.

10.6.3.3. No additional ultrasonic test required

10.6.4. Macroetch

10.6.4.1. Billet Inspection - Transverse disc sections shall be cut from both ends of all billets or bars prior to rolling into bars or extrusion into tubes. The samples shall be etched in accordance with ASTM A 604 in hot hydrochloric acid and water (1:1) at 160 to 180 °F for sufficient time to develop a well-defined macrostructure.

10.6.4.1.1. Samples shall show no imperfection such as pipes, cracks, porosity, segregation, and inclusion detrimental to fabrication or performance.

10.6.4.1.2. Samples shall exhibit macrostructure equal to or better than the following macrophotographs of ASTM A 604

Class	Condition	Severity
1	Freckles	A
2	White Spots	A
3	Radial Segregation	B
4	Ring Pattern	C

10.6.4.2. Finished Product Inspection

10.6.4.2.1. Transverse disc sections shall be removed from both ends of bars and tubes and etched in accordance with ASTM A 604 in hot hydrochloric acid and water (1:1) at 160 to 180 °F for sufficient time to develop a well-defined macrostructure.

10.6.4.2.2. Samples shall show freedom from pipes, porosity, inclusions, decarburization, seams, internal, or external defects.

10.6.4.2.3. If samples are representative of material prior to centerless grind/turn operation, any surface defects, seams, or decarburization must be within the stock removal zone.

10.6.4.2.4. Samples shall exhibit no evidence of segregation when examined visually (no magnification).

10.6.5. Grain Size - The grain size shall be 8 or finer with occasional grains as large as 5 permissible when determined in accordance with procedures prescribed in ASTM E 112.

10.6.6. Inclusion Content - Radial specimens, approximately 0.28 sq. in. in surface area shall be taken midway between center and surface of transverse discs removed from billet/bar representative of the top and bottom of each ingot. The hardened specimens shall be polished on a face longitudinal to the direction of rolling and rated for inclusion content in accordance with the Jernkontoret Chart, Method D Plate III of ASTM E 45. No specimen shall exceed the following limits:

Inclusion Rating

Type	A	B	C	D
Thin	1.5	1.0	1.0	1.5
Heavy	0	0	0	0

10.6.6.1 For types A, B, and C thin combined, there shall be not more than three fields, No. 1.5A or No. 1.0B and C types, and not more than five other lower rateable A type thin fields per specimen. For types A, B, C, and D heavy, there shall be not more than 1 in each category.

10.6.6.2. A rateable field is defined as one which has a type A, B, C, or D inclusion rating of at least No. 1.0 thin or heavy in accordance with the Jernkontoret Chart, Plate III ASTM E 45.

10.6.7. Reponse to Heat Treatment - Specimens shall demonstrate hardness within the specified limits when tested for hardenability or heat treatment response as specified.

10.6.8. Decarburization - Decarburization shall be within limits specified in applicable specifications such as AMS 6491.

10.6.9. Ultrasonic Inspection

10.6.9.1. Bars and forging rounds shall be immersion ultrasonic tested in accordance with approved procedures.

10.6.9.2. The ultrasonic test shall cover both shear and longitudinal directions and be calibrated to reject the following defects:

Direction	Size and Type
Shear Wave	.004 deep x .050 long shot
Longitudinal Wave	50 percent of 2/64 in. flat bottomed hole Depth: half of section dim.

These criteria are sensitive to bar size; calibration and test details to be negotiated between material vendor, bearing manufacturer, prime contractor, and government representatives.

10.7. Surface Defects - Bars or rods shall be of surface condition or centerless ground to a finish commensurate with ultrasonic testing requirements.

10.8. Tolerances - Unless otherwise specified, tolerances shall conform to the following:

10.8.1. Bars: Latest issue of AMS 2251, as applicable

10.8.2. Tubing: Latest issue of AMS 2253, as applicable to Mechanical Type

10.9. Rejection - Material not conforming to this specification or to authorized modifications will be subject to rejection.

10.10. Inspection

10.10.1 The bearing supplier shall be responsible for assuring that all tests and inspections promulgated in this specification are performed.

10.10.2. Material accepted by the original purchaser, which subsequently reveals defects not detected during inspection, is subject to rejection.

10.10.3. Test methods to be followed shall be in conformance with ASTM issue in AMS 2350 when ASTM methods are specified.

10.11 Material Certification

10.11.1. The bearing supplier shall require and maintain complete certification for all raw material.

10.11.2. The material certification shall contain the following information:

1. Mill source

2. Purchase order number

3. Heat numbers

4. Quantity per heat

5. Material specification number (inc. revision number)

6. Size

7. Numerical results of specified tests

8. When material capability requirements are specified, vendor must certify either actual test data or certify capability

9. Chemical analysis

10. Condition of material supplied, i.e., hot rolled, hot rolled annealed, cold drawn, etc.

11. Results of MPI tests

12. Results of nonmetallic inclusion ratings

13. Results of ultrasonic testing

14. Results of test for response to heat treatment

Specification for Rework, Refurbishment, and Restoration of Aircraft Engine and Power Transmission Cylindrical Roller and Ball Bearings

1. Scope - This specification shall provide for the optimized utilization of aircraft engine, helicopter main power train transmission, and auxiliary bearings determined to be critical either by virtue of their performance, function, or availability.

1.1 Sources - Those bearings to be processed under the provisions of this specification may be used bearings removed after service, unused bearings returned from the field, or rejected bearings returned for reinspection and salvage.

2. Applicable Documents - See specification for ball and cylindrical roller bearings for general specifications, standards, and other supporting documentation. In addition the following will apply:

MIL-B-58105 Bearing Restoring by Raceway Grinding

NAVAIR 01-1A-503 (TM 55-1500-322-24) US Navy Bearing Manual

NAVAIR 02-1-517 US Navy Standard Maintenance Procedures for Pratt and Whitney Aircraft Engines

3. Qualification/Certification - Sources for bearing refurbishment and restoration must be qualified by the original contractor or the cognizant government agency by dynamic testing or quality audit.

In lieu of testing of the specific bearing being processed, qualification may be based on prior evaluation of another bearing size of

similar material, type, and family produced by the source using continued unchanged processes.

Refurbished or restored bearings shall be permanently marked to indicate name of procurement agency as well as all other markings required to ensure traceability.

3.1. Requalification Requirements - On those bearings for which a new facility is to be utilized, or for which a significant process of design change is intended, requalification is required. The cognizant government authority may conduct the qualification by testing or quality audit, or may delegate this responsibility.

3.2. Recertification Requirements - For those bearings which have not been processed for four years or more, recertification of processes and standards by the original/prime contractor is required. As an alternative, the cognizant government authority may perform the recertification.

4. Process - The refurbishment-restoration process will, in general, proceed in accordance with the flow chart shown on the Bearing Processes Chart.

5. Inspection - Inspection of assemblies and components shall be conducted in accordance with negotiated quality plans, which shall include record requirements.

5.1. Inspection Details - First article inspection details shall be recorded and maintained as a permanent record. Subsequent inspection requirements shall be per the quality plan.

6. Rejection - All components and assemblies which are rejected shall be identified and held for Quality/Material Review Board action. Those components which may be reworked shall be rerouted at the discretion of the rework manufacturer, providing the original drawing requirements are met. Assemblies may be reworked, dismantled, and reassembled providing this is accomplished in accordance with a negotiated quality control plan.

7. Change Control - There may be no change to the original design, material, tolerances, basic processes, quality control plan, heat treat, post heat treat, or rework procedures without prior approval of the original contractor or the cognizant government authority.

7.1. Change Control Approval - Any request for change shall be the responsibility of the vendor to submit prior to the initiation of work on the contract.

8. Process and Inspection Approval - After award of a production contract, all process operations and inspection procedures will be evaluated and confirmed by the cognizant government authority or his delegated representative, to ensure compliance with currently accepted aerospace industry standards. This will include all destructive and nondestructive methods and quality control plans and inspection methods.

8.1. Process and Inspection Changes - These shall be requested and approval pursued as stated in paragraph 7.

8.2. Process and Inspection Deviation Approval - These shall be requested and approval pursued as stated in paragraph 7, with the exception that processing may continue, verbal approval having been granted. It shall be the responsibility of the vendor to provide documentation of each such instance.

9. Definitions - See Glossary

10. Rework Process - Bearing rework is divided into three categories: Processing, Refurbishment, and Restoration. These operations will be conducted as detailed in TM 55-1500-322-24, MIL-B-58105 and as further specified in this document. The basic procedure is illustrated in the Bearing Processes Chart.

For disassembly, bearings with nonremovable retainer-roller sets require removing retainer rivets or permanently distorting retainer web portions. Bearings with rivetted retainers may be reassembled by installing new rivets, but distorted retainers must be rejected.

10.1. Level I - Processing bearings involves inspecting a used bearing, checking/comparing it to new bearing drawing requirements. This process involves:

a. Demagnetization

b. Cleaning

c. Nondestructive testing

d. Visual/microscopic inspection

e. Minor repair: buffing and polishing of inactive and active surfaces, stoning of nicks and gouges in corner radii

f. Dimensional inspection

g. Reassembly (to include retainer rivetting or snap-in retention)

h. Dynamic testing (if required): rotation of bearing rings to permit evaluation of noise level, torque characteristics, and/or similar functional parameters

i. Lubrication/preservation - as covered in the purchase order

j. Packaging - as covered in the purchase order

10.2. Level II - Refurbishment of bearings is rework of bearings that goes beyond the scope of Processing (per 10.1). This encompasses all of the operations of Processing plus one or more of the following:

a. Replace rolling elements

b. Rework/replace retainers

c. Interchange of used components and/or substitution of new components to create a different assembly identity

d. Grinding and/or plating of mounting surfaces as necessary to return to original drawing dimensions

e. Honing (superfinishing) of raceways (not to exceed .0003 inches total metal removal per surface)

10.3. Level III - Restoration of bearings involves the removal of material by a grinding operation. This term encompasses all of the operations of Processing (per 10.1) and Refurbishment (per 10.2) plus one or more of the following operations:

a. Grinding of raceways - up to .003 inches per side

b. Installation of oversize rolling elements

c. Installation of original or replacement retainer when required

10.4. Level IV - Remanufacturing of bearings involves rework of bearings, where new components beyond the rolling elements are manufactured. This term encompasses all the operations of processing and may involve those of either refurbishing or regrinding of the old parts which are reused and one or more of the following:

a. Manufacturing of a new raceway

b. Manufacturing of a new retainer

10.5. Additional methods or operations may be substituted for those noted in the above TM 55-1500-322-24 or in MIL-B-58105 if approved by the original contractor or the cognizant government authority.

10.6. Identification - to maintain traceability, in all cases the bearing rings and cages will carry permanent marking including original identification as well as the bearing rework contractor, lot, and date of completion for all successive reworks. For any part, the permissible number of reworks shall not exceed five.

11. Preservation and Packaging shall be provided in accordance with the original purchase order, unless specified otherwise.

12. Issue and Storage shall be in accordance with TM 55-1500-322-24 when the required qualification has been accomplished. Follow-on lots shall be released for use in accordance with the purchase order.

GLOSSARY

AA - Finish: Arithmetic Average - a numerical value of surface finish obtained by measuring the vertical distance from the mean line of an irregular surface to the profile in the same manner as with RMS, adding these measurements and dividing by the number of measurements

ABEC 1, ABEC 5, ABEC 7, ABEC 9: Annular Bearing Engineers Committee (AFBMA) designations indicating degrees of ball bearing precision

Active Surfaces: The areas on the rings, rolling elements, and cage that engage another surface in rolling or sliding contact, as the bearing rotates

AFBMA: Anti-Friction Bearing Manufacturers Association

Angular-Contact Bearing: A type of ball bearing whose internal clearance and ball raceway locations are such as to result in a definite contact angle and predetermined relationship of inner to outer ring surfaces, when loaded axially

ANSI: American National Standards Institute

Antifriction Bearing: A bearing using rolling elements such as balls, rollers, or needle rollers

AQL: Acceptable Quality Level is a value specified for a type or group of defects characteristic of an item or product. The specified AQL value (example - AQL of 0.4) is referred to in the appropriate sampling plan table of MIL-STD-105. The number of defects for each AQL is then obtained that will determine whether to accept or reject the lot

Axial Clearance: see End Play

Axial Load (Thrust): Force applied to the bearing in line with the bearing axis

Ball Complement: Size and number of balls used in a ball bearing

Bearing Axis: The imaginary center line about which the outer or inner ring will revolve

Bearing Stack: Matched mutiple assembly of two or more bearings

Bore Diameter: Inside diameter of inner ring

Bore, Outer Ring: Inner diameter of outer ring

Boundary Dimensions: Dimensions for bore, outside diameter, width, and corner(s)

Burnish: A luster or polish on a surface caused by friction or rubbing contact

Cage (retainer, separator): A device, partially surrounding the rolling elements and traveling with them, with the purpose of spacing the rolling elements in proper relationship to each other, preventing mutual abrading

Centrifugal: Moving or acting in a direction away from a center or axis of rotation

Clearance, Axial: see End Play

Clearance, Radial: Radial internal clearance is the total diametrical movement of the unclamped ring when the specified radial load is reversed

Cone: The inner ring of a tapered roller bearing

Contact Angle: Angle between plane perpendicular to bearing axis and line drawn between centers of contact of balls to inner and outer ring raceways

Convex: A surface that is curved outward in the center

Corrosion: A process which destroys the metal by chemical or electrochemical action and converts it to an oxide, hydroxide, or sulfate compound

Crack: A break, fracture, fissure, crevice, or separation in the structure of the part

Critical Defect: A defect that judgment and experience indicate is likely to result in hazardous or unsafe conditions for individuals using, maintaining, or depending upon the product; or a defect that judgment and experience indicate is likely to prevent performance of the tactical function of a major end item such as an aircraft, missile, or space vehicle

Crowned Roller: Having a very large radius profile on both sides of a straight cylindrical center section to provide a modified line contact with the raceways

Defect: (discrepancy) Any deviation of a part from specified requirements

Diametrical Stability: The degree of stability that hardened steel may have to resist growth or permanent expansion (a function of the amount of retained austenite)

Duplex Bearing: Single-row ball or tapered roller bearings specially ground for use in matched sets. They are manufactured with a controlled relationship of axial location of the inner and outer ring faces. Usually they are arranged in pairs for mounting face-to-face (DF), back-to-back (DB), or tandem (DT). When more than two bearings comprise a set, they are arranged in tandem or in combinations of DT-DB or DT-DF.

Dynamic Balance: That condition in a rotating body reflecting how closely the mass axes are coincident or the same as the rotational axis

Eccentricity (radial runout): Occurs when the center of one circular surface is not coincident (the same) as the center of another surface. Ex: Nonuniform thickness between the bore and the ball groove of an inner ring

End Play (Test): The bearing is to be lubricated with light oil and one of its rings clamped to prevent axial movement. The specified reversing measuring load is applied to the unclamped ring so that the resultant movement of that ring is parallel to the bearing axis. The end play is the total movement of the unclamped ring when the load is applied first in one direction and then the other.

Flaking: A condition of advance surface fatigue where small pieces of metal are loosened from the base material

Fluting: A form of pitting in which pits occur in a regular pattern so as to form transverse grooves or flutes in the raceway

Fretting (fret wear, fretting corrosion, false brinelling): The rapid abrasion that occurs at the interface between contacting, highly loaded metal surfaces when subjected to vibratory motions of low amplitude, usually accompanied by the formation of oxides of the abraded metal

Galling: The transfer of material from one surface to another during sliding contact

Groove Runout with Reference Side, Inner Ring: see Raceway Runout with Reference Side, Inner Ring

Groove Runout with Reference Side, Outer Ring: see Raceway Runout with Reference Side, Outer Ring

Hardness: Resistance of metal to plastically deform, determined by indentation

Height of Raceway Shoulder: Distance from bottom of respective raceway to inner-ring outer diameter or outer-ring inner diameter (same as race depth)

Inclusion: A void, discontinuity, or solid foreign particle in the molecular structure of metal

Inner Race: Raceway of inner ring

Inner Ring: The inner component of a bearing

Inside Diameter: Dimension across center of ring bore, may be used to express dimension across bore of snap ring, shield, seal, etc.

Inspection: The process of measuring, examining, testing, or otherwise comparing the unit or product (bearing) with the requirement

Inspection, Quality Conformance (CQI): All examinations and tests performed for the purpose of determining conformance with specified requirements

Inspection, 100 percent: An inspection in which Specified characteristics of each bearing are examined or tested to determine conformance with requirements

Internal Clearance: see Clearance, Radial

Lands: The flat surfaces on either side of the raceway or rings

Land Riding Retainer: A retainer guided by either the inner-ring or outer-ring lands

Laps: Discontinuities or irregularities in the material as a result of heading or forging

Lay: Direction of the predominant surface pattern

Loading Groove (filling slot): Notch in raceway to permit assembly of a maximum number of rolling elements

Loading Groove Bearing: A bearing of maximum capacity type in which there is introduced, by means of a filling slot or loading groove, more balls or rollers than can be incorporated in a non-filling slot or Conrad-type bearing

Lot: This term shall mean inspection lot, a collection of bearings or kits from which a sample is to be drawn and inspected to determine conformance with the acceptability criteria.

Lot Size: The lot size is the number of bearings in a lot.

Major Defect: A defect, other than critical, that is likely to result in failure, or to materially reduce the usability of the product for its intended purpose

Martensite: A phase of steel with a body-centered crystalline structure characterized by a needle-like microstructure

Matching: Inner and outer rings in duplex bearing sets that are matched for face flushness, bore, O.D., and eccentricity, within specified tolerances

Micron: One millionth of a meter, 1 micron equals .00003937 inches.

Minor Defect: A defect that is not likely to materially reduce the usability of the bearing for its intended purpose, or is a departure from established standards having minimal influence in the effective use or operation of the unit

Nominal: Approximate or rated value

Outside Diameter Squareness with Side (Test): One side of the outer ring is supported on a flat plate of suitable dimensions (with inner ring free) and held against a stop located close to the lower corner of the outside diameter. The indicator is applied directly above the stop close to the upper corner of the outside diameter. The deviation from the outside

diameter squareness with side is the difference between the minimum and maximum reading of the indicator when rotating the outer ring one revolution.

Parallelism of Sides: The difference between the largest and smallest width of the bearing rings

Pitch Diameter, Rolling Elements: The diameter of the center line of the rolling elements

Pitting: Minute removal of material from surfaces through fatigue, corrosion, or electrical arcing

Plastic Flow: Deformation that permanently remains after removing the load which caused it

Pocket Cage: That portion of cage which is shaped to receive the rolling element

Precision: The degree of agreement of repeated measurements of a quantity. Compare with accuracy.

Preload: Predetermined internal thrust (axial) load deliberately imposed by design in certain duplex bearing sets to provide increased radial and/or axial rigidity

Processed Bearing: A bearing that has been used and then cleaned, inspected, gaged, tested, and preserved for additional use

Profile: The contour (external outline) of a surface in a plane perpendicular (right angle) to the surface

Profile (measured): A representation of the profile obtained by instrumental means

QCL: Quality Characteristics List

Race: same as Raceway

Raceway: The contact path of the rolling element on rings of roller bearings

Raceway Diameter: Diameter of the inner- or outer-ring raceway of a bearing

Raceway, Inner Ring: Roller or ball track or groove in the inner ring

Raceway, Outer Ring: Roller or ball track or groove in the outer ring

Raceway Runout, with Reference Side, Inner Ring (Test): Mount bearing on arbor having a very slight taper (preferably 0.0001 to 0.0002 in. on the diameter per inch of length). Support outer ring in horizontal position and apply indicator to side of inner ring. The deviation from groove parallelism with side is the difference between the maximum and the minimum reading when rotating the arbor one revolution.

Raceway Runout, with Reference Side, Outer Ring (Test): Mount bearing on arbor having a very slight taper (preferably 0.0001 to 0.0002 in. on the diameter per inch of length). Apply a true running weight to the outer ring. Support arbor in a vertical position and apply indicator to side of outer ring. The deviation from groove parallelism with side is the difference between the maximum and minimum reading when rotating outer ring one revolution.

Radial Clearance: see Clearance, Radial

Radial Load: Force applied to the inner or outer rings perpendicular to the bearing axis

Radial Runout (Test): Mount bearing on arbor having a very slight taper (0.0001 to 0.0002 in. on diameter per inch of length). Apply indicator on center of stationary outer ring. The radial runout is the difference between the maximum and minimum reading when rotating the arbor one revolution. Corrections should be made for the inaccuracy of the arbor.

Radial Type Bearing: A rolling-element bearing primarily designed to support a radial load perpendicular to shaft axis

Random Sampling: Plan for choosing sample units in a random or nonregular pattern for quality inspection

Rating Life (L_{10}): Number of hours at a given speed that 90 percent of a group of identical bearings will attain or exceed before the first indication of fatigue cracking or spalling

RBEC 1, RBEC 5: Designations indicating degrees of roller bearing precision, Roller Bearing Engineers Committee (AFBMA)

Refinish: To restore an existing surface finish without removing all the existing finish

Refurbishment: Refurbishment is defined as the process of removing the rolling elements from used bearings, disassembling, inspecting, and cleaning the bearing and replacing the rolling elements with new elements.

Restoration: Restoration is defined as the process of grinding the raceways of used bearings and replacing the rolling elements with oversized elements whereby the internal geometry and clearances in the bearing are maintained.

Retainer: see Cage

Rework: The overall procedure for cleaning, reworking, refurbishing, restoring, and reissuing of used or rejected bearings

Rockwell Hardness Test: A test for determining the hardness of a material based on the depth of penetration of a specified penetrator into the specimen under specified load conditions

Roller: Load carrying rolling element of cylindrical, conical, or curvilinear contour

Roller Complement: Size and number of rollers in a bearing

Roller Diameter: Maximum diameter of straight rollers

Roller Length: Distance between the ends or faces of the roller

Rolling Bearing: A bearing using rolling elements such as balls, rollers, or needles to reduce friction and to support load

Runout: The amount that one surface lacks of being co-planar with another surface of the same part

Runout, Radial: see Radial Runout

Sample: A sample consists of one or more parts drawn from a lot, the parts being selected at random without regard to their quality.

Sampling Plan: A sampling plan indicates the number of bearings from each lot which are to be inspected and the criteria for determining the acceptability of the lot.

Scratches: Linear abrasions on the surface

Scuffs: A series of small superficial or shallow scratches

Separables: A bearing assembly that may be completely or partially disassembled without permanently deforming any of its component parts

Separator: see Cage

Side Runout, Inner Ring (Test): Mount bearing on arbor having a very slight taper (0.0001 to 0.0002 in. on diameter per inch of length). Apply indicator against side of inner ring. The side runout is the difference between the maximum and minimum reading when rotating the arbor one revolution.

Skew: Slant, twist, nonsymmetrical, nonuniform distribution

Smearing or Pickup: Removal of raceway, ball, or cage material due to skidding contact and its redisposition at another point in the form of a smear

Spalling: Actual removal of material from raceway or rolling element surfaces in the form of flakes, resulting in cavities - fatigue related

Squareness of O.D./Bore with Face: The squareness (90° angle) of the face with the outside diameter/bore of a ring

Staking: A method of retaining a bearing by displacing housing material over the chamfer or of displacing retainer material to contain a rolling element in the pocket

Stains: Surface discoloration

Standard: A physical or numerical limit which is used as a reference

Statistical: Of, relating to, or dealing with the collection and analytical interpretation of numerical data

Superficial: Affecting only the surface of an object

Surface Texture: Repetitive or random deviations from the nominal surface which form the pattern of the surface. Include roughness, waviness, lay, and flaws.

Tandom Duplex Mounting: Assembly of two or more ball bearings mounted so as to divide the thrust load

Tarnish: A stain on the surface

Temper: To soften hardened steel by reheating at a temperature below the hardening temperature

Thrust Bearing: A ball or roller bearing with space between rings oriented perpendicular to the axis of rotation. It is primarily intended to carry thrust loads.

Used Bearing: A bearing that has seen service and has been subjected to operating loads

Width, Bearing: The width of the individual ring and cage parts, or face of inner ring to opposite face of the maximum axial envelope dimension, whichever is greater

Width, Inner Ring: Dimension across the inner ring

Width, Outer Ring: Dimension across the outer ring

Demagnetize
PD 680 Wash
Agitated Hot Oil Dip
Agitated PD 680 Wash
Agitated MIL-T-82533 Dip

<u>Carbon Remover Required</u>
Agitated MIL-C-14460 Wash
Agitated Water Rinse
Agitated Water Displacement
Dip MIL-C-11796
Agitated PD 680 Rinse
Agitated MIL-T-81533 Wash

Pre-inspection and/or dismantling
See Paragraph 10.1
Buffing
Agitated PD 680 Wash and Hand
Spray Cleaning
Visual Inspection
Dimensional Inspection

<u>Refurbishment</u>
See Paragraph 10.2

<u>Restoration</u>
See Paragraph 10.3

Demagnetize
Assembly
Wash in agitated dip tank with
MIL-C-15074
Wash in Agitated PD 680
Identification
Additional cleaning as required
Preservation
Packaging

BEARING PROCESSES CHART

BEARING DATA AND LIFE ANALYSIS

Bearing Data Tabulation

Table 1 lists the array of data tabulated for twenty-six ball and cylindrical roller bearings. In most cases complete data on bearing cage geometry were not available, so it was necessary to estimate noncritical cage dimensions such as width for the calculation of cage mass used in the bearing life analysis. In some cases it was also necessary to assume a roller crown configuration because it was not specified.

Shaft and housing geometries and fits were generally not available so bearing operating clearances had to be assumed for the life analysis.

Because of the variation in completeness of available bearing data on manufacturers drawings, standard drawing formats and data tables were generated. These are shown with four examples of General Electric Co. bearings in the figures of appendix E.

Computer Analysis of Bearing Life

A total of 44 bearings were analyzed. The results are summarized in tables 2 through 5. Fatigue lives were analyzed using the computer program SHABERTH developed by SKF Industries, Inc. Attempts to analyze three additional cylindrical roller bearings with lobed raceways and large roller complements using the computer program CYBEAN were unsuccessful due to convergence difficulties caused by the large roller complements. Data on several tapered and spherical roller bearings were also received from TSARCOM. These were not programmed because the specification is limited to ball and cylindrical roller bearings. Data on several additional ball and cylindrical roller bearings were incomplete and insufficient for fatigue life analysis, so the total bearing analysis effort was limited to 44 bearings. Bearing fatigue life data are summarized in table 2.

From initial calculations, the L_{10} lives for many of the bearings seemed quite low, much lower, in fact, than the lives for many of the bearings calculated by the manufacturer. Manufacturer's data for the bearings in two aircraft transmissions, the CH-47D and AH-1J, were received from TSARCOM and were used for the comparison. The generally low fatigue lives calculated using SHABERTH prompted detailed investigations using selected bearings on the effects of surface finish, radial clearances, oil viscosity, and operating temperature on fatigue life. In addition, the lives of CH-47D bearings were calculated for cubic mean and maximum power loads with both MIL-L-7808 and MIL-L-23699 oils for direct comparison with manufacturer's data (table 3). Similarly, the AH-1J bearing lives were calculated at 60 percent and 100 percent power loads for direct comparison with manufacturer's data (table 4). In all, a total of 119 computer runs were made in the initial phase of the bearing analysis. Because of the wide variance in the fatigue lives predicted for selected CH-47D bearings and the manufacturer's data, a follow up program was conducted with the manufacturer using his temperature data and a material life factor of 6 (table 5). The resulting life comparisons are discussed below.

The following assumptions were made for the purposes of the analysis: The data received were limited to detailed bearing geometry, loads, speeds, and oil-in temperature (210 °F). No information on actual operating temperatures, shaft fits, shaft and housing geometry, and shaft and housing materials was furnished, so it was necessary to make engineering assumptions of operating contact angle for ball bearings and operating clearance for cylindrical roller bearings.

In all the intial phase studies a material life factor of 1 was assumed. The fatigue life for any assumed material life factor can easily be calculated by multiplying by the factor. Bearing operating temperatures were assumed to be 230 to 240 °F. In most cases, this is probably low. As a result, the predicted bearing lives are probably higher than if an increased operating temperature was assumed. The lubricant life factor is calculated by the program. It is a direct result of the calculated elastohydrodynamic film thickness at both rolling element - race contacts and the composite surface roughnesses.

Table 2 lists the lubricant-life factors at the outer and inner race contacts for each of the bearing life calculations. When the lubricant life factor is less than 1, there is a penalty on life due to incomplete elastohydrodynamic lubricant films and asperity interactions in the Hertzian contacts.

Tables 3 and 4 give comparisons of predicted bearing lives (manufacturer's and this effort using SHABERTH) assuming a material life factor of 1 and bearing temperatures of 230 to 240 °F for, respectively, CH-47D bearings and AH-1J bearings. Further correspondence and data input from the CH-47D manufacturer led to the data tabulated in table 5. The assumptions here were a material-life factor of 6 and a bearing temperature of 170 °F.

Effects of Design and Operating Variables

In a number of cases where low bearing lives were obtained with the initial set of assumptions made, multiple runs were made varying surface finish, cylindrical roller bearing diametral clearance, oil viscosity effects (MIL-L-7808 and MIL-L-23699 oils), and bearing operating temperature to determine their effects on bearing life. These data are tabulated in table 2.

Surface Finish Effects. - A number of bearings were analyzed, not only with the manufacturer's specified surface finishes for the outer, inner, and rolling elements, but also with improved surface finishes to determine what the theoretical effect of better surface finishes would be on their fatigue lives.

In some cases the elastohydrodynamic film conditions are extremely marginal and improvements in surface finish from the standard 8 μin. RMS on both races and 4 μin. RMS on the rolling elements, to 4 μin. throughout, and even to 2 μin. throughout, showed no improvement in life. Examples of bearings in this category are 204-040-424, 204-040-136, and 114-DS-160. A slight improvement in life of bearing 145-DS-018 was noted with an assumed improved race surface finish. The life improvement was rather nominal, from

49 to 58 hours. This slight improvement comes about because the EHD conditions were too marginal to achieve any significant improvement in life through the improved surface finish.

Several bearings showed significant improvement in life when an improved surface finish condition was assumed. In this category are included bearings 114-DS-665, 114-DS-284A, 114-DS-667, and 114-DS-571. These bearings showed life improvement factors from 3 up to about 10. Life data with the manufacturer's specified surface finishes are listed.

Diametral Clearance Effects. - The life of cylindrical roller bearings, particularly heavily loaded bearings, is clearance-sensitive. Bearings 70952-08557 and 114-DS-665 illustrate this. Improvements in life of about 2 to 1 can result with decreasing diametral clearance, resulting in improved roller load distribution. An excessively large operating clearance can result in a life penalty. A detailed analysis to optimize the running clearance in bearings where life is marginal can be potentially beneficial.

Oil Viscosity Effects. - Some bearings show improved life with the higher viscosity MIL-L-23699 oil than with MIL-L-7808 oil. If EHD film thicknesses are very marginal (low film thickness - surface roughness ratio), no improvement in life is likely to be seen. An example is bearing 204-040-136. If lambda, the film thickness - surface roughness ratio, is in the range from 0.5 to 1.5 with the lower viscosity oil, then a significant improvement in predicted life can be expected with a higher viscosity oil. Examples are bearings 205-040-246, 114-DS-668, and 114-DS-670.

Operating Temperature. - An effect similar to that seen with different viscosity oils can be obtained by assuming a range of bearing operating temperatures. As the assumed bearing operating temperature increases, the fatigue life would be expected to decrease because the effective oil viscosity decreases. This has the effect of diminishing the EHD film thickness conditions lowering the lubricant life factor. Bearing 6038-T-48, a split inner-ring ball bearing, was analyzed assuming bearing operating temperatures ranging from 239 to 428 °F. Over this range of operating temperatures there is a significant change in the viscosity of the oil. For this particular study the oil chosen was MIL-L-23699. The predicted L_{10} life at 239 °F is 702 hours and it steadily decreases to a predicted L_{10} life of 98 hours at 428 °F. This illustrates the significant effect that operating temperatures can have on bearing predicted life. In order to accurately predict the effects of oil viscosity on bearing life, it is necessary to know what the actual bearing operating temperatures are.

Comparisons with Manufacturer's Life Data

Fatigue lives predicted by SHABERTH are generally lower than those calculated by the manufacturers of the AH-1J and CH-47D aircraft. For the AH-1J bearings, if a material life factor of 5 is assumed, then the two sets of bearing lives agree reasonably well. The disparities in predicted lives for the CH-47D bearings, shown in table 3, are greater, sometimes exceeding an order of magnitude. The data in table 3 and table 4 (AH-1J bearings) assume a material life factor of 1 and bearing temperatures of 230 to 240 °F. The disparities in the CH-47D bearing data prompted a follow up study with the manufacturer. Manufacturer's temperature data (a bulk oil

temperature of 160 °F and a bearing temperature of 170 °F) and a material life factor of 6 were used. The resulting data are shown in table 5. Agreement is reasonably good, but still lower than the manufacturer's predictions. These differences may be due partly to the fact that only single bearing solutions were obtained in this investigation because complete shaft and housing geometry data and fits were not available. The validity of bearing fatigue life predictions can only be determined by rigorous testing under conditions which accurately simulate actual operating conditions and by comparisons with field experience. An in-depth examination of field experience with the AH-1J and CH-47D bearings would be invaluable. In particular, the methodology of predicting life in the low lambda (ratio of EHD film thickness to surface roughness) region needs to be explored.

It is important to note that the AFBMA method disallows the use of a material life factor greater than 1 at low lambda ratios, when EHD conditions are marginal. Under poor EHD conditions an increased incidence of surface-originated failures can be expected. Under such conditions material cleanliness becomes less important. For many of the AH-1J and CH-47D bearings EHD film conditions are marginal because of heavy loads, so the validity of using a high material life factor is questionable. This needs to be verified by comparisons with either or both rigorous fatigue life testing and field experience.

RECOMMENDATIONS

In order to assess the value of the two specifications presented in this report they must be integrated into the Army system and implemented. Realistically, no specification in its initial form, even when reviewed by a broad spectrum of potential suppliers, can be expected to be flawless. Only by implementation and use will whatever shortcomings that do exist come to the surface. By use in the Army system, any called for modifications and/or additions can be periodically incorporated to eventually arrive at specifications which will both improve quality control of ball and cylindrical roller bearings and increase availability. The value of programs like this can only be realized if the results are implemented.

In the case of the Specification for Ball and Cylindrical Roller Bearings, distribution to candidate vendors should elicit proposals to include the data items which are lacking. The engineering representatives of industry foresaw no difficulty in making this information available. One of the most glaring aspects of the present procurement system is the lack of complete data on bearings procured.

With the Specification for Ball and Cylindrical Roller Bearings in place providing definition of bearing variables and operating conditions, positive findings could result from a study of the effect of improving bearing life and reliability (reduction in life scatter) on readiness of complete helicopters. This could lead to reduction in the number of helicopters required to maintain a specified effective force.

The specification "Rework, Refurbishment, and Restoration of Aircraft Engine and Power Transmission Cylindrical Roller and Ball Bearings" should be integrated into Army procedures and upgraded as required, based on

experience with its use. Full implementation will require, after a period of familiarization by Army personnel, some hands-on participation by experts in specialized fields including, but not limited to:

Identifying and quantifying significant variables

Use and maintanence of equipment

Recognizing causes of dimensional and textural variations, including interrelated discrepancies

Organizing and scheduling such talent to be available as required is a challenging assignment.

The importance of compiling complete operating conditions and geometry data for all bearings cannot be overemphasized. The computer life analysis procedure can be used to investigate the possibility of enhancing the life expectancy of any bearing through geometry optimization (improved surface finish, cylindrical roller bearing diametral play, and ball-bearing contact angle and curvatures). Of course, life predictions are not meaningful unless field experience is logged for comparison with predicted lives. Careful computer life studies along with possible geometry changes should be considered for any bearings which exhibit less than satisfactory service lives.

REFERENCES

1. Hanau, H., et al., "Bearing Restoration by Grinding", Proc. Joint Army - NASA Seminar, USAAVSCOM-TR-76-27, May, 1976.

2. Bamberger, E. N., et al., "Life Adjustment Factors for Ball and Roller Bearings - An Engineering Design Guide", ASME, N.Y., N.Y., 1971.

3. Rohlik, H. E., Coe, H. H., Crouse, J. E., Hody, W. F., Jones, R. E., and Klann, J. L.: "Turbomachinery Technology", from Selected Technology for the Gas Industry, NASA SP 5103, March 1975, pp. 129-186.

4. Bamberger, E. N., Zaretsky, E. V., and Signer, H., "Endurance and Failure Characteristics of Main-Shaft Jet Engine Bearing at 3 x 10^6 DN", J. Lubr. Technol., Trans. ASME, Ser. F, Vol. 98, No. 4, Oct. 1976, pp. 580-585.

5. Jones, A. B., "Ball Motion and Sliding Friction in Ball Bearings", J. Basic Engr., Trans. ASME, Ser. D, Vol. 81, No. 1, March 1959, pp. 1-12.

6. Jones, A. B., "A General Theory for Elastically Constrained Ball and Radial Roller Bearings under Arbitrary Load and Speed Conditions", J. Basic. Engr., Trans. ASME, Ser. D, Vol. 82, No. 2, June 1960, pp. 309-320.

7. Harris, T.A., "An Analytical Method to Predict Skidding in Thrust Loaded Angular - Contact Ball Bearings", J. Lubr. Technol., Trans. ASME, Ser. F, Vol. 93, No. 1, Jan. 1971, pp. 17-24.

8. Crecelius, W. J., Harris, T. A., and Muidel, M. H., "Dynamic Analysis of High-Speed Ball Bearings Under Combined Loading", SKF-AE-72A004, SKF Industries, Inc., 1972.

9. Crecelius, W. J., Heller, S., and Chiu, Y.P., "Improved Flexible Shaft-Bearing Thermal Analysis with NASA Friction Models and Cage Effects", SKF-AL-76P003, SKF Industries, Inc., Feb. 1976.

10. Kleckner, R. J., and Pirvics, J., "High-Speed Cylindrical Roller Bearing Analysis, SKF Computer Program CYBEAN, Volume I, Analysis", SKF-AL-78P022-Vol. I, SKF Industries, Inc., King of Prussia, Pa., NASA CR-159460, 1978.

11. Kleckner, R. J., and Pirvics, J., "High-Speed Cylindrical Roller Bearing Analysis, SKF Computer Program CYBEAN. Volume II, Users Manual," SKF-AL-78P023-Vol. 2, SKF Industries, Inc., King of Prussia, Pa., NASA CR-159461, 1978.

12. Kleckner, R. J., Pirvics, J., and Castelli, V., "High Speed Cylindrical Rolling Element Bearing Analysis 'CYBEAN' Analytical Formulation" J. Lubr. Technol., Trans. ASME, Ser. F, Vol. 102, No. 3, July 1979, pp. 380-390.

TABLE 1. - TYPICAL INDIVIDUAL BEARING DATA

ITEM	BEARING NUMBER				
	7-113100062	205-040-246	70951-08363	70951-08362	2-300-056
Type of Bearing	Ang. Cont. Ball	Ang. Cont. Ball	Deep Groove Ball, Split I Ring	Deep Groove Ball, Split I Ring	Deep Groove Ball, Split I Ring
Bore, in	2.5591	3.1491	4.7244	2.3622	2.7559
O.D., in	4.7244	5.5118	7.874	4.320	4.9213
Width, in	2.7165	3.0709	2.7559	.8661	.9449
Rows and Number of Roll Elements	3/14 (one opposed)	3/15 (one opposed)	2/16	1/14	1/15
Ball or Roller Dia., in	.6875	.78125	1.062	.625	.6875
Contact Angle	30° DT 25° preload	25° Unmtd.	38-1/2° ± 1-1/2°	28° ± 1-1/2°	25-1/2°
Race Configuration	O Ring relieved, I Ring Full Shoulders	O Ring relieved, I Ring Full Shoulders	Deep Groove I Ring Split	Full Shoulder I ring, one hole from bore	Full Shoulder
I Ring Curvature	52 percent ± 1/2 percent	52 percent ± 1 percent	52 percent (.5525)	52 percent	52 percent
O Ring Curvature	52 percent ± 1/2 percent	52 percent ± 1 percent	51.5 percent (.5472)	51.5 percent	51.5 percent
Type of Retainer	1 pc. mach'd AG/plate, I Ring Land Rdg	1 pc. mach'd I Ring Land Riding	1 pc. mach'd I Ring Land Riding	1 piece Land Riding	1 piece Land Riding
Ball/Pocket Clearance	.018	.0077 min.	.025-.03	.022-.030	.020-.027
Retainer/Ring Cl.	I Ring .011-.019	I Ring	.015-.025	.013/.022	.016/.022
I Ring O.D./O.R. I.D.	3.257	4.718	5.870	3.085	3.495
I Ring Surface Finish*	6 min.		8 min.	8 min.	8 min.
O Ring Surface Finish*	6 min.		8 min.	8 min.	8 min.
Roll. El, Surf. Finish*	2 min.	3 min.	4 min.	4 min.	2 min.
Speed	20,000	6600	258	20,900	19,700
Oil in °F	210 °F	210 °F	210 °F	210 °F	210 °F
Thrust Load, lb.	2691	4274	14,437	0	1133
Radial Load, lb.	.4517	3175	6315	1003	44
Radial Cl. Unmounted	.0069/.0077		.0125 min.	.004 min.	.0042/.005
Cage Land Width, in	see note 1.	see note 2.	see note 3	see note 4.	see note 5.

* AA min.

TABLE 1. - Continued.

ITEM	BEARING NUMBER				
	1-300-015	5034-T-28	6038-T-48	70952-08557	7095208556
Type of Bearing	Split I Ring Deep Groove Ball	Split I Ring Deep Groove Ball	Split I Ring Deep Groove Ball	Cy. Rol. Dbl. Ribbed I Ring STR.O.R.	Cyl. Rol. Dbl. Ribbed I Ring STR.O.R.
Bore, in	1.9685	1.5748	1.808	6.4961	7.874
O.D., in	3.5433	3.3465	2.900	8.4646	9.8425
Width, in	.7874	.984	.636	.9449**	.9449
Rows and Number of Roll Elements	1/13	1/12	1/15	1/30	1/39
Ball or Roller Dia., in	.5000	.5625	.375	.6299D .6299L	.5906D .5906L
Contact Angle	19-1/4°	26° ± 2°	31.5° ± 1.5°	----	----
Race Configuration	Full Shoulder	Full Shoulder Flanged O.R. Split I.R.	Full Shoulder Split I.R.	Double Ribbed I Ring STR.O.R.	Double Ribbed I Ring STR.O.R.
I Ring Curvature	52 percent	52 percent ± 1/4 percent	53 percent ± 1/4 percent		
O Ring Curvature	52 percent	as above	51 - 51-1/2 percent		
Type of Retainer	One Piece Land Riding	One Piece O Ring Land Riding	One Piece O Ring Land Riding	One Piece Mach'd I Ring Land Riding	One Piece Mach'd I Ring Land Riding
Ball/Pocket Clearance	.016-.024	.015-.020	.010-.015		
Retainer/Ring Cl.	.012/.017	.012/.017	.029 max.	.015/.025	.012/.022
I Ring O.D./O.R. I.D.	2.515	12.823	2.602	7.096	8.497
I Ring Surface Finish*	10 min.	4 min.	4 min.	8 min.	8 min.
O Ring Surface Finish*	10 min.	4 min.	4 min.	8 min.	8 min.
Roll. El, Surf. Finish*	4 min.	2 min.	2 min.	4 min.	4 min.
Speed	24,000	20,900	44,700	258	1206
Oil in °F	210 °F	210 °F	210 °F	210 °F	210 °F
Thrust Load, lb.	450	720	417	0	0
Radial Load, lb.	0	80	62	7086	4842
Radial Cl. Unmounted	.0037/.0047	.0035/.0047	.027/.0035	.0074/.0099	.0093/.0113
Cage Land Width, in	see note 6	see note 7	see note 8		

* AA min.
** I Ring has extended length for set-screw mounting

TABLE 1. - Continued.

ITEM	BEARING NUMBER				
	114-DS-665	5034-T-06	5035-T-69	5036-T-87	2-300-034
Type of Bearing	Cyl. Rol. Dbl. Ribbed Inner STR.O.R.	Cyl. Rol. Dbl. Ribbed O Ring Ext'd STR I.R.	Cyl. Rol. Dbl Ribbed O Ring STR.I.R.	Cyl. Rol. Dbl. Ribbed O Ring STR.I.R.	Cyl. Rol. Dbl. Ribbed O Ring NO I.R.
Bore, in	2.9528	1.5768	1.5700	1.9695	2.0448 under rollers
O.D., in	6.2992	2.6772	2.1963	2.8897	2.9528
Width, in	1.4567	.5906	.395	.532	.6299
Rows and Number of Roll Elements	1/12	1/14	1/14	1/18	1/18
Ball or Roller Dia., in	.9843D .9746L	.2756D .2756L	.1969D** .1969L	.2756D .2756L	.3150D .3150L
Contact Angle					
Race Configuration	Double Ribbed I Ring w/ext'd Hub STR.O.R.	Double Ribbed O Ring STR.I.R.	Double Ribbed O Ring STR. I.R.	Double Ribbed O Ring STR. I.R.	Double Ribbed O Ring
I Ring Curvature					
O Ring Curvature					
Type of Retainer	One Piece Mach'd I Ring Land Riding	One Piece Mach. O Ring Land Riding	One Piece Mach. O Ring Land Riding	One Piece Mach. O Ring Land Riding	One Piece Mach. O Ring Land Riding
Ball/Pocket Clearance	.011/.016 circ .020/.025 Axial	.006/.013 Ax .005/.013 circ	.006/.013 Ax .005/.013 cir	.006/.013 Ax .005/.013 cir	
Retainer/Ring Cl.	.006/.016	.006/.014	.005/.013	.006/.0013	.002/.018
I Ring O.D./O.R. I.D.	3.950 calcul	2.291	1.988	2.607	2.559
I Ring Surface Finish*	8 min.	4 min.	4 min.	4 min.	
O Ring Surface Finish*	8 min.	4 min.	4 min.	4 min.	6 min.
Roll. El, Surf. Finish*	8 min.	4 min.	4 min.	4 min.	2 min.
Speed	15,066	20,900	20,900	44,700	16,000
Oil in °F	210 °F	210 °F	210 °F	210 °F	210 °F
Thrust Load, lb.	0	0	0	0	0
Radial Load, lb.	4999	80	60	80	4
Radial Cl. Unmounted	.0025/.0030	.0010/.0014	.0007/.0011	.0016/.0020	
Cage Land Width, in	.211	.096 Calc.	.081 Calc.	.100 Calc.	.100 Calc. P.D.=2.360

* AA min.
** Crown radius = 10", .065 cyl. length

TABLE 1. - Continued.

ITEM	BEARING NUMBER				
	2-300-035	6876011	6871508	2-300-011	2-300-059
Type of Bearing	Cyl. Rol. Dbl. Ribbed I Ring STR. O.R.	Cyl Rol. Dbl. Ribbed O Ring NO I.R.	Deep Groove Ball Brg. w/ frac'd O Ring w/O.R.ret rgs	Deep Groove Split I Ring 2 Row Ball Brg	Med. Groove Double Row Ball Brg.
Bore, in	3.3465	1.1424 under rollers	.7874	2.5591	2.1654
O.D., in	5.1177	1.6535	1.6535	4.7244	3.1496
Width, in	.8661	.3543	.5856	2 rows 1.811 1 row .9055	1.0236 overall .5118 one row
Rows and Number of Roll Elements	1/22	1/unk.	1/11	2/14	2/16
Ball or Roller Dia., in	.4921D .5443L		.2812	.6875	.3125
Contact Angle			20.5°	23-29°	15°
Race Configuration	Double Ribbed I Ring STR O.R.		Deep Groove w/frac'd O Ring	Deep Groove Split I Ring .004 Grinding Shims	Med. Groove Solid I Ring
I Ring Curvature			53 percent	51 percent	51 percent
O Ring Curvature			52 percent	52 percent	52 percent
Type of Retainer	One Piece Mach'd I Ring Land Riding	One Piece Mach. O Ring Land Riding	One Piece Mach O Ring Land Riding	One Piece Mach. O Ring Land Riding R.D. 3.6417	Two Piece Rivetted I Rg Land Riding
Ball/Pocket Clearance	.016/.022A .008/.012D			.0145/.0185	.008/.013
Retainer/Ring Cl.	.012/.022		.007/.017 Tot Dia. Clear.	.020/.025	.014/.022
I Ring O.D./O.R. I.D.	3.9713	1.414	1.381	4.059	2.481
I Ring Surface Finish*	8 min.			8 min.	6 min.
O Ring Surface Finish*	8 min.			8 min.	6 min.
Roll. El, Surf. Finish*	5 min.			2 min.	2 min.
Speed	19,700	51,120	51,120	16,000	16,000
Oil in °F	210 °F	210 °F	210 °F	210 °F	210 °F
Thrust Load, lb.	0	0	157	2730	350
Radial Load, lb.	163	9.25	13.3	88	89
Radial Cl. Unmounted	rounded up .0035/.004		.0014/.0021	.0033/.0043	.0008/.0012
Cage Land Width, in	.133 Calc. P.D.=4.257			.0078 Calc.	.160 min.

* AA min.

TABLE 1. - Continued.

ITEM	BEARING NUMBER			
	5034-T-07	145-DS-017	SB-1062	204-040-136
Type of Bearing	Dbl. Row opposed angular contact Sp I ring, 1 pc O rg. 1 w/ext lg. for puller groove	Ang. contact Dbl. row w/1 pc O ring and 2 pc opposed inners	Back-back 2 row angular contact relieved O rings **facing out	Deep Groove Split inner ring
Bore, in	2.4016	2.9528	3.1496	4.3302
O.D., in	4.0400	5.1181	4.3307	6.6929
Width, in	1.717 overall	1.8898 overall .9843 row	1.2598 overall	.9843
Rows and Number of Roll Elements	1/15	2/16	2/24	1/21
Ball or Roller Dia., in	.5625	.6875	.3750	.6875
Contact Angle	22.5°-27.5°	30°	17°	40°
Race Configuration	1 pc dbl row O rg. separate I rings opposed contacts (relieved center) 1 w/ puller groove	1 pc dbl row O.R. separate inner rgs. w/ opposed cont. rel. cen. O rg w/flanged OD	Deep Groove I Ring relieve O ring	Deep Groove Split I Ring
I Ring Curvature	52 percent ± 1/4 percent	52 percent		52 percent ± 1 percent
O Ring Curvature	52 percent ± 1/4 percent	52 percent		54 percent ± 1 percent
Type of Retainer	One Piece Mach. O Ring Land Riding	One Piece Mach. O Ring Land Riding	One Piece Mach. I Ring Guided (offset .0023/.0027)	
Ball/Pocket Clearance	.015/.021	.008/.017		
Retainer/Ring Cl.	.012/.017	.017/.025		
I Ring O.D./O.R. I.D.	3.563	4.401	3.51 min.	
I Ring Surface Finish*	4 min.	6 min.		
O Ring Surface Finish*	4 min.	6 min.		
Roll. El, Surf. Finish*	2 min.	2 min.		
Speed	20,900	3930		
Oil in °F	210 °F	210 °F		
Thrust Load, lb.	985	1061		
Radial Load, lb.	60	1185		
Radial Cl. Unmounted	.0038/.0046	.0072/.0082	.0022/.0028	
Cage Land Width, in	.092 Calc.	.107 Calc. P.D.=3.9903		

* AA min.
** O.D. one piece

TABLE 1. - Continued.

ITEM	BEARING NUMBER	
	204-040-036 Rev. U	204-040-036 Rev. V
Type of Bearing	Deep Groove Split I Ring	Deep Groove Split I Ring
Bore, in	4.3302	4.3302
O.D., in	6.6929	6.6929
Width, in	.9843	.9843
Rows and Number of Roll Elements	1/20	1/21
Ball or Roller Dia., in	.750	.6875
Contact Angle	29.5° ± 2°	40°
Race Configuration	One Piece O Ring, Split I Ring	One Piece O Ring, Split I Ring
I Ring Curvature	52 percent ± 1 percent	
O Ring Curvature	54 percent ± 1 percent	
Type of Retainer	One Piece mach'd inner ring riding	One Piece mach'd inner ring riding
Ball/Pocket Clearance	.014 (ref)	.005 (ref)
Retainer/Ring Cl.		
I Ring O.D./O.R. I.D.	5.133	5.133
I Ring Surface Finish*		
O Ring Surface Finish*		
Roll. El, Surf. Finish*		
Speed		
Oil in °F		
Thrust Load, lb.		
Radial Load, lb.		
Radial Cl. Unmounted	.010/.0119	
Cage Land Width, in	see note 9	

* AA min.

TABLE 1. - Concluded.

Note 1. 7-113100062
25° Contact Angle w/preload - 30° w/o
Clearance .0069-.0077 in, .0047-.0055 in
No preload data other than this.

Note 2. 205-040-246
Gage load - 100 lb./row
Preload on the bearing - 640 lb.
Preload on tandem pair ± 50 lb./bearing
P.D. 4.3307 in
Steel Shaft dia. 3.1501 - 3.1505 in Fit .0007 in loose - .0014 in tight
Housing bore 5.5110 - 5.5118 in Steel liner fit .0001 in L-.0008 in T

Note 3. 70951-08363
Shim thickness .010 in
Faces flush under 2500 lb. gage load for each bearing

Note 4. 70951-08362
Faces flush under 250 lb. gage load
Shim thickness .005 in

Note 5. 2-300-056
Shim .004 in
Retainer land .092 in
P.D. 3.8386 in

Note 6. 1-300-015
Shim .003 in
Retainer land .108 in

Note 7. 5034-T-28
Shim .004 in
Retainer land .092 in
P.D. 2.434 in

Note 8. 6038-T-48
Shim .009 in
Retainer land .092 in
P.D. 2.354 in

Note 9. 204-040-036
Radial clearance determined with split inner rings clamped

TABLE 2 - SUMMARY OF BEARING ELASTOHYDRODYNAMIC AND FATIGUE LIFE DATA

Lubricant inlet temperature=210 °F
Assumed bearing temperature=230 to 240 °F

Bearing Number	Type	Speed, rpm	Load, lbs		Lubricant Life Factor		Fatigue Life, hrs.	Comments
			Radial	Thrust	Outer	Inner		
2-300-056 Rev.	Ball SI	19700	44	1133	.60	.39	956	Improved surface finishes would enhance life
2-300-034	C.R.	16000	4		.46	.28	2.54×10^7	
2-300-059 Rev. D	Ball Dbl Row	16000	45	175	.29	.26	2096	
2-300-035 Rev. B	C.R.	19700	163		.40	.41	15580	No skidding predicted
2-300-011	Ball S.I. Dbl Row	16000	44	1365	.34	.27	325	Improved surface finishes would enhance life
68/1508 Rev. G	Ball	51120	13	157	1.14	.63	556	
205-040-246	Ball Triplex	6600	1060	2362	.23	.21	237	Improved surface finishes would enhance life
145-DS-017	Ball Duplex	3930	592	1061	.27	.22	2089	
1-300-015	Ball S.I.	24000		450	.25	.21	666	Improved surface finishes would enhance life
7-113100062	Ball Triplex	20000	1505	1305	.94	.59	133	Improved surface finishes would enhance life
70951-08362-041 Rev B	Ball S.I.	20900		1003	.43	.29	821	
70951-08363-041 Rev A8	Ball S.I. Dbl Row	258	3107	7218	.21	.21	1816	Improved surface finishes would enhance life

TABLE 2. - Continued.

Bearing Number	Type	Speed, rpm	Load, lbs		Lubricant Life Factor		Fatigue Life, hrs.	Comments
			Radial	Thrust	Outer	Inner		
5034-T-07 Rev B	Ball Duplex	20900	985	30	2.38	2.22	2886	
5034-T-06 Rev C	C.R.	20900	80		.43	.34	50040	No skidding predicted
5034-T-28	Ball S.I.	20900	80	720	2.25	2.02	3977	Improved surface finishes would enhance life
114-DS-162 Rev C	C.R.	225	7950		.21	.21	63.6	
114-DS-283 Rev E	C.R.	3930	7459		.21	.21	47.5	
114-DS-574 Rev G	C.R.	6912	596		.21	.21	2586	
114-DS-576 Rev G	C.R.	6912	1632		.21	.21	989	
114-DS-666 Rev G	C.R.	11730	497		.27	.25	8510	
204-040-270 Rev J	C.R.	324	2584		.21	.21	3279	100% load
"	"	"	1530		.21	.21	19840	60% load
204-040-249 Rev F	C.R.	6400	2480		.21	.21	316	100% load
"	"	"	1332		.21	.21	2786	60% load
70952-08557-041	C.R.	258	7086		.21	.21	473	C_D= .0077"

TABLE 2. - Continued.

Bearing Number	Type	Speed, rpm	Load, lbs		Lubricant Life Factor		Fatigue Life, hrs.	Comments
			Radial	Thrust	Outer	Inner		
70952-08557-041	C.R.	258	7086		.21	.21	989	C_D = .002"
114-DS-665	C.R.	15066	4999		.29	.23	104	C_D = .0027"
"	"	"	"		.30	.24	155	C_D = .001"
"	"	"	"		.30	.24	193	C_D = .000"
6038-T-48	Ball S.I.	44700	62	417	2.49	2.40	702	T_B = 239°F
"	"	"	"	"	2.29	2.01	622	T_B = 275°F
"	"	"	"	"	1.77	1.50	472	T_B = 320°F
"	"	"	"	"	0.70	.46	167	T_B = 392°F
"	"	"	"	"	0.39	.29	98	T_B = 428°F
114-DS-571 Rev G	C.R.	11730	3690		.24	.21	137	C_D = .0025" 8, 8, 4 u. in.
					2.24	2.04	2001	C_D = .0007" 2, 2, 2 u. in.
					2.24	2.05	2242	C_D = .0004" 2, 2, 2 u. in.
114-DS-668 Rev M	Ball S.I.	14410		1826	.46	.30	781	MIL-L-7808 oil
"	"	15066		2205	.47	.31	474	MIL-L-7808 oil
"	"	"		"	1.68	1.19	1800	MIL-L-23699 oil

TABLE 2. - Continued.

Bearing Number	Type	Speed, rpm	Load, lbs		Lubricant Life Factor		Fatigue Life, hrs.	Comments
			Radial	Thrust	Outer	Inner		
114-DS-669 Rev H	Ball	11730		259	.21	.21	1337	MIL-L-7808 oil
"	"	12263		204	.21	.21	2488	MIL-L-7808 oil
"	"	"		"	.36	.29	3664	MIL-L-23699 oil
114-DS-670 Rev G	C.R.	11730	3556		.24	.21	156	MIL-L-7808 oil C_D = .0015"
"	"	12263	3589		1.55	1.04	912	MIL-L-7808 oil C_D = .0005"
"	"	"	"		2.23	2.01	1702	MIL-L-23699 oil C_D = .0005"
"	"	11730	3556		2.23	2.01	1843	MIL-L-7808 oil 2, 2, 2 u. in.
114-DS-665 Rev H	C.R.	15066	4999		.76	.45	369	6, 6, 6 u. in.
"	"	"	"		1.73	1.28	1021	4, 4, 4 u. in.
114-DS-160 Rev H	Ball Dbl Row	3930	1066	1892	.21	.21	279	8, 8, 4 u. in.
"	"	"	"	"	.21	.21	279	4, 4, 2 u. in.
114-DS-284A Rev E	Ball	6912		5037	.27	.23	319	8, 8, 2 u. in.
"	"	"		"	1.54	1.09	1565	4, 4, 2 u. in.

TABLE 2. - Continued.

Bearing Number	Type	Speed, rpm	Load, lbs		Lubricant Life Factor		Fatigue Life, hrs.	Comments
			Radial	Thrust	Outer	Inner		
212-040-456 Rev B	Ball Duplex	4173	670	1960	.21	.21	46	516 moment load
"	"	"	"	"	.21	.21	71	No moment load
"	"	"	443	1238	.21	.21	210	323 moment load
"	"	"	"	"	.21	.21	209	No moment load
212-040-143 Rev B	Ball Duplex	4123	508	1160	.21	.21	93	476 moment load
"	"	"	"	"	.21	.21	226	No moment load
"	"	"	333	818	.21	.21	449	310 moment load
"	"	"	"	"	.21	.21	450	No moment load
212-040-144 Rev D	Ball Duplex	4363	381	2182	.21	.21	75	346 moment load
"	"	"	"	"	.21	.21	88	No moment load
"	"	"	282	1376	.21	.21	242	228 moment load
"	"	"	"	"	.21	.21	242	No moment load
204-040-424 Rev L	Ball Duplex	4363	274	421	.21	.21	259	MIL-L-7808 oil
"	"	"	"	"	.21	.21	328	MIL-L-23699 oil
"	"	"	188	325	.21	.21	593	MIL-L-7808 oil

TABLE 2. - Continued.

Bearing Number	Type	Speed, rpm	Load, lbs		Lubricant Life Factor		Fatigue Life, hrs.	Comments
			Radial	Thrust	Outer	Inner		
114-DS-664 Rev F	C.R.	14410	2119		.21	.21	156	8, 8, 8 u. in. C_D = .002"
"	"	"	"		.21	.21	215	8, 8, 8 u. in. C_D = .0005"
"	"	"	"		1.67	1.33	1440	4, 4, 2 u. in. C_D = .0005"
114-DS-572 Rev F	Ball S.I.	6912		1054	.21	.21	159	8, 8, 2 u. in.
"	"	"		"	.24	.22	169	4, 4, 2 u. in.
114-DS-667 Rev K	C.R.	11730	6372		.35	.26	177	8, 8, 4 u. in.
"	"	"	"		1.46	.95	657	4, 4, 2 u. in.
204-040-136 Rev V	Ball S.I.	324	3546	9164	.21	.21	81	5625 moment load
"	"	"	"	"	.21	.21	137	No moment load
"	"	"	2092	5500	.21	.21	313	3239 moment load
205-040-246	Ball Triplex	6400	617	1356	.23	.21	976	MIL-L-7808 oil
"	"	"	"	"	.23	.21	2238	MIL-L-23699 oil
"	"	"	388	936	.71	.46	3063	MIL-L-7808 oil
"	"	"	"	"	.85	.55	8767	MIL-L-23699 oil

TABLE 2. - Concluded.

Bearing Number	Type	Speed, rpm	Load, lbs		Lubricant Life Factor		Fatigue Life, hrs.	Comments
			Radial	Thrust	Outer	Inner		
204-040-424 Rev L	Ball Duplex	4363	188	325	.21	.21	601	MIL-L-23699 oil
145-DS-018 Rev A	C.R.	6912	7980		.21	.21	49	8, 8, 4 u. in.
"	"	"	"		.30	.24	58	4, 4, 4 u. in.
212-040-455 Rev B	C.R.	4173	999		.21	.21	321	MIL-L-7808 oil
114-DS-161 Rev L	Ball S.I.	225	14989	18130	.21	.21	455	
145-DS-034 Rev B	Ball	3930 I.R. 821 O.R.		175	.21	.21	35850	

TABLE 3 - COMPARISON OF PREDICTED BEARING LIVES

CH-47D Bearings

Bearing No.	Oil	Cubic Mean Load		Maximum Power Load	
		NAS 3-23520	M'fr.	NAS 3-23520	M'fr.
145-DS-034	7808 23699	35850	>100000		>100000
145-DS-018	7808 23699			49	1280
114-DS-668	7808 23699	474 1800	12216	303	2082
114-DS-669	7808 23699	2488 3664	60300	430 583	9820
114-DS-670	7808 23699	912 1702	3800	89 195	432
114-DS-664	7808 23699	367	5200	50	792

TABLE 4 - COMPARISON OF PREDICTED BEARING LIVES

AH-1J Bearings

Bearing No.	Oil	60% Load		100% Load	
		NAS 3-23520	M'fr.	NAS 3-23520	M'fr.
204-040-136 (Brg V)	7808 23699	313 313	2298	81 81	521
204-040-270 (Brg VI)	7808 23699	19840 19840	40318	3279 3279	6576
205-040-249 (Brg II)	7808 23699	2786 2786	9615	316 316	1092
205-040-246 (Brg I)	7808 23699	3063(1)	1356	976(1) 2238	421
212-040-456 (Brg XXII)	7808 23699	210 210	659	46 46	184
212-040-143 (Brg XVI)	7808 23699	449 450	1476	93 163	410
212-040-144 (Brg XIII)	7808 23699	242 242	1072	75	314
204-040-424 (Brg XII)	7808 23699	593 601	2143	257 328	710
212-040-455 (Brg XXI)	7808 23699		6562	321	652

(1) Single bearing life- loads assumed are .33R, .5T and .33M

TABLE 5- COMPARISON OF PREDICTED BEARING LIVES (Manufacturer's Data)

CH-47D Bearings

Assumptions:

Bearing temperature= 170°F
Bulk Oil temperature=160°F
Material life factor= 6

Bearing No.	Oil	Cubic Mean Load		Maximum Power Load	
		NAS 3-23520	M'f'r	NAS 3-23520	M'f'r
114-DS-664	7808 23699	950 2776	5200	119 406	792
114-DS-668	7808 23699	3268 4163	12216	605 809	2082
114-DS-669	7808 23699	11086 29772	60300	1652 5009	9820
114-DS-670	7808 23699	2392 2651	3800	281 379	432

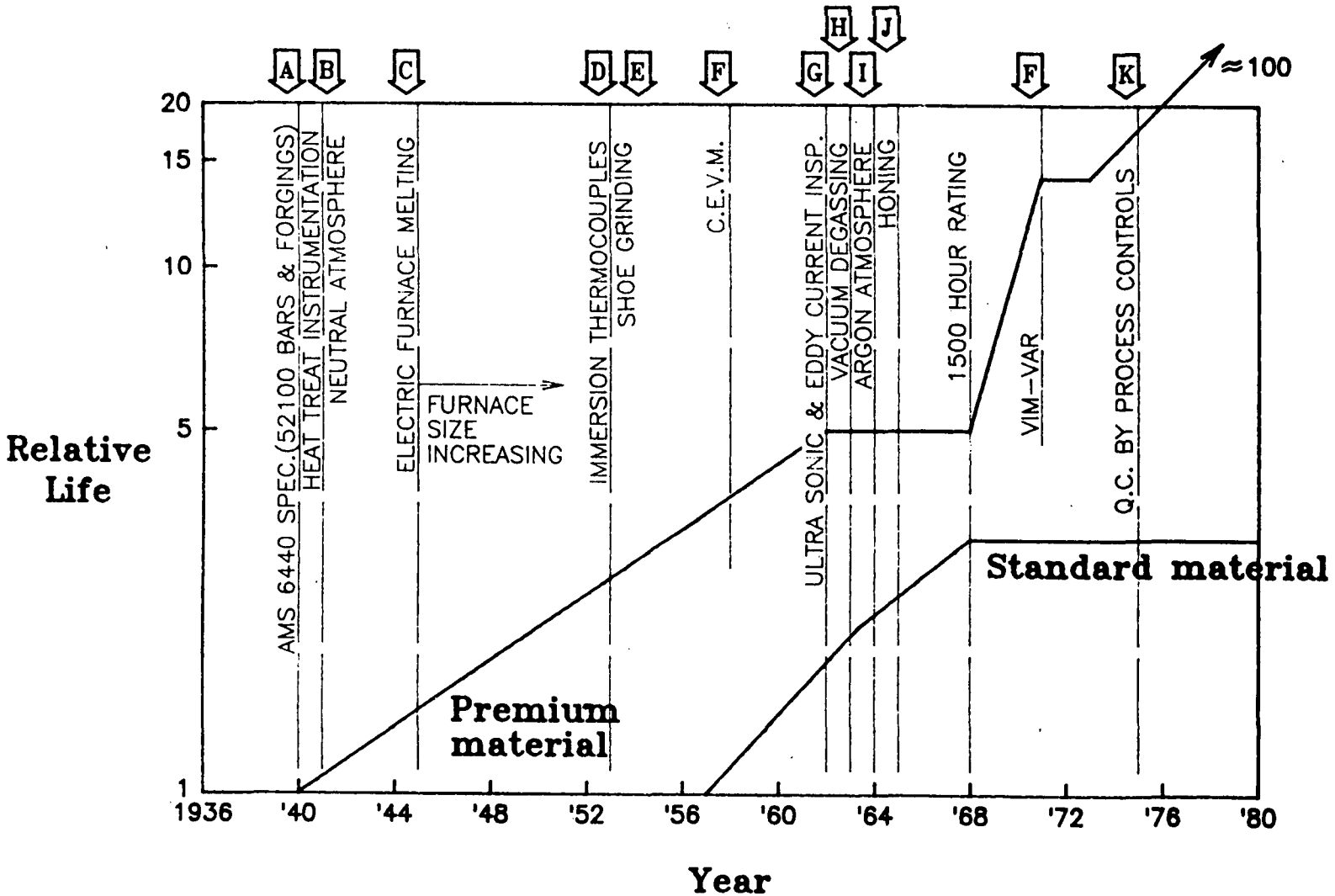

Figure 1. - Major advances contributing to rolling-element bearing life improvement over the past four decades.

APPENDIX A

ATTENDANCE LIST

FIRST INDUSTRY COORDINATION MEETING

NAS3-23520 January 24-25, 1983

NAME	COMPANY
1. Acurio, John	AVRADCOM
2. Anderson, William	ASICO
3. Battles, Roy	Bell Helicopters
4. Branhof, Edward	TSARCOM
5. Campbell, Arthur	Fafnir
6. Chase, William	Split Ballbearing
7. Derner, William	ASICO
8. Dill, James	Air Force
9. Dutta, Mitten	AVRADCOM
10. George, Richard	Kaydon
11. Gilbert, Robert	Garrett Turbine Engine
12. Ironside, William	Pratt and Whitney
13. Irwin, Arthur	ASICO
14. Joseph, Martin	TSARCOM
15. Keller, Carl	Sikorsky
16. Lagasse, Normand	AVCO Lycoming
17. Lenski, Joseph	Boeing Vertol
18. Linhares, James	AVRADCOM
19. Litts, Richard	SKF
20. Lundquist, Daniel	TRW
21. McBain, Neal	Split Ballbearing
22. Malott, R. Clayton	Detroit Diesel

NAME	COMPANY
23. McCabe, Jack	MTI
24. Morrissey, T. L.	Rollway
25. Pineo, Carroll	General Electric
26. Poole, William	Pratt and Whitney
27. Sawicki, Hank	Hughes Helicopter
28. Scheidt, R. N.	Detroit Diesel
29. Schuetz, Harold	AVRADCOM
30. Signer, Hans	Industrial Tectonics
31. Stern, Helmut	Industrial Tectonics
32. Weden, Gil	AVRADCOM
33. Zaretsky, E. V.	NASA Lewis

APPENDIX B

WRITTEN COMMENTS ON FIRST INDUSTRY COORDINATION MEETING

1. Boeing Vertol Co. letter Feb. 2, 1983 (J.W. Lenski)
   letter Feb. 18, 1983 (J. W. Lenski)
   letter June 2, 1983 (J. W. Lenski)
2. Detroit Diesel Allison letter Feb. 15, 1983 (R. Scheidt)
3. General Electric letter Feb. 10, 1983 (C. B. Pineo)
   letter Feb. 22, 1984 (C. B. Pineo)
4. Hughes Helicopter, Inc. letter Feb. 23, 1983 (H. E. Sawicki)
5. Industrial Tectonics, Inc. letter Feb. 18, 1983 (H. R. Signer)
   letter Mar. 9, 1983 (H. R. Signer)
6. Kaydon Corp. letter Feb. 8, 1983 (R. F. George)
7. Pratt and Whitney Aircraft Group letter Feb. 2, 1983 (W. R. Ironside)
   letter Feb. 14, 1983 (W. E. Poole)
   note Feb. 14, 1983 (W. E. Poole)
8. Rollway letter Mar. 16, 1983 (T. L. Morrissey)
9. Sikorsky Aircraft letter Feb. 21, 1983 (C. H. Keller)
10. SKF Industries, Inc. letter Feb. 23, 1983 (R. A. Litts)
11. TRW Bearings Div. letter Jan. 31, 1983 (D. Lundquist)

cc ANDERSON
DERNER

BOEING VERTOL COMPANY

P.O. Box 16858
Philadelphia, Pennsylvania 19142

7484-JWL-064

February 2, 1983

Arthur S. Irwin Company, Inc.
Technology Consultants
Driftwood Center
Bemus Point, New York 14712

Subject: Summary of Comments Made During Industry Coordination Meeting - January 24 and 25, 1983

References: (1) Draft of Proposed Critical Bearing Procurement Specification

(2) Draft of Specification - Optimized Bearing Utilization

Dear Art:

I would like to thank you for the opportunity to participate in the Industry Coordination meeting held in Cleveland, Ohio on NASA Contract NAS3-23520. During this two day meeting, many comments were made concerning Boeing Vertol engineering review of your proposed bearing specifications, references (1) and (2). This letter is intended to summarize the major comments made during this meeting. Enclosed is a statement of my review of the specifications and also a marked up copy of each specification showing recommended changes. If you have any questions concerning these comments, please call me.

Also during the subject meeting, Bill Anderson indicated that his analysis of several of our bearings showed very low B-10 lives. Please request Bill to send me some information concerning these bearings and I will provide him with our analysis to determine differences in B-10 life.

Looking forward to seeing you again at the next meeting in May.

Sincerely,

BOEING VERTOL COMPANY

J. W. Lenski Jr.
Senior Engineer

/mj

Enclosure

BOEING

REVIEW COMMENTS ON BEARING SPECIFICATIONS REFERENCES (1) AND (2)

The intent of the two proposed specifications [references (1) and (2)] is not very clear. It appears that the specifications were developed to insure that bearing performance would be improved thus reducing supply problems and also that information could be available on the drawings to insure proper control and analysis. It is my opinion that these specifications will not accomplish these objectives and may result in additional supply problems and higher initial cost of bearings. If only drawings which were issued after the mid 1970's were reviewed, you would find that most of this information is available on Boeing Vertol drawings and that bearing designs are adequate for the application.

The information requested in reference (1) is intended to improve the performance of bearings and allow for computer analysis of the bearing. Bearing performance due to fatigue life is not a major cause of bearing rejections. A survey of bearings rejected at the Corpus Christi Army Depot for the years 1969, 1971 and 1977 show that bearing fatigue failure represented only 1% to 3% of the bearings rejected. Most bearings are rejected due to corrosion, handling damage, contamination, etc. which are not addressed by these specifications. All information required to conduct a computer analysis of a given bearing does not belong on a design drawing. Only information required to make and inspect the bearing should be on the drawing. Other information belongs in the stress report for the aircraft drive system. Shaft fits, materials, loads, temperatures, etc. should and could be provided in a stress report. This information should be requested by the government when the contract for a new aircraft is issued.

The issuance of a common bearing specification for engines and transmissions may also cause additional problems. There are major differences between engine bearings and transmission bearings. Most helicopter transmission bearings are heavily loaded and operate at low to moderate speeds. Materials other than VIM-VAR M-50 are used because of fits, gear/shaft materials, lower temperatures and cost considerations. Experience with M-50 in helicopter transmissions has not always been successful. Fracture and low fatigue lives have occurred. The option of other materials should be considered in this specification. Also, other types of bearings such as spherical roller, tapered roller and needle roller bearings should be included for transmission applications.

The specification for inspection and repair of bearings may cause additional problems. Many of the current helicopter transmission bearings do not have separable cages. Bending of tangs or drilling of rivets is not considered to be good inspection techniques. We have experienced cage failures due to these operations. Therefore, new cages would be required during inspection of many of the current bearings inspected per this specification. Also, unless the rework operation is conducted by a facility that is familiar with aircraft bearings, many potential problems may occur due to improper rework and/or assembly procedures. This factor should be considered when estimating cost savings and improved scheduling.

A final word of caution should be made. If the intent of these specifications is to update all active bearing designs, major problems will be experienced. Increase cost for bearing fabrication and bearing drawing changes (bearing detail, next assembly and top assembly drawings) and schedule delays will be encountered. If these specifications are to be applied to future bearing designs, then the system can handle and react to these specifications without a major impact on cost and lead times. Industry has been improving on its bearing drawings and will continue to do so in the future. More effort should be directed toward maintenance and handling problems which have been the major contributors toward bearing supply shortages.

Attached is a marked-up coyp of both specifications. Several recommended changes are shown. If you have any questions concerning these comments, please call me on (215) 522-3902. I hope that these comments will assist you in developing the final specifications on bearings.

SPECIFICATIONS

FOR

BALL AND CYLINDRICAL ROLLER BEARINGS

ARTHUR S. IRWIN CO
Technology Consultants
Driftwood, R. F. D. 1
Bemus Point, NY 14712

ORIGINAL PAGE IS
OF POOR QUALITY

MILITARY SPECIFICATION

the word critical should be defined or use another word. Critical bearings require special controls at B/N. All bearings are not critical at B/N.

CRITICAL BEARING PROCUREMENT

1. Scope - this specification covers the requirements for the qualification and procurement of critical engine and propulsion power train rolling element bearings.

2. Applicable documents - specifications:

MIL-STD-10	AMS-6491
MIL-STD-129	AMS-2410
MIL-STD-143	AMS-2412
MIL-STD-271	AMS-4616
MIL-I-6868	AMS-2418
MIL-I-6866	AMS-2526
MIL-H-6875	AMS-2430
MIL-C-11796	AMS-2404
MIL-B-197	AMS-6419
MIL-L-7808	ASTM E 588-76
MIL-L-23699	ASTM E 112
ANSI B46.1	ASTM E 18
QQ-C-320	ASTM B 147-71 Alloy 864
AMS-6490	ANSI Y14.5
AMS-6414	AMS-6415

Test specs not available at B/N. Should all be called out and time.

3. Qualification - Sources for bearing procurement must be qualified by the original contractor or by TSARCOM.

3.1 Qualification requirements - A statisically significant quantity of each bearing must be successfully operated through an overhaul period without failure in a flight - weight installation when subjected to a load - temperature - speed spectrum determined to be controlling by the contractor or military authority. define quantity

3.2 Requalification - No less frequently than every 24 months, a statistically significant sample (as determined by the controlling military authority) shall be requalified by testing under the current requirements compatible with current operating regimes in the field.

requalify only if design or process changes

4. Inspection - Unless otherwise agreed-to in writing by the cognizant military authority, all drawing-listed and other noted characteristics shall be 100% inspected by the contractor and shall be verified by the ~~TSARCOM~~ GOVERNMENT inspector. Sample plans must be negotiated with the contracting authority, ~~after qualification and acceptance of the first production order~~.

4.1 Inspection details - Dimensional details shall be verified in detail to insure achievement of all characteristics on the drawing. Additional detailed inspection shall be performed to insure compliance with all drawing notes and references, including referenced specifications and processes (to include those noted in paragraph 2).

5. Procurement - No bearings may be procured from other than qualified sources.

continued next page .....

6. Rejection - All components and assemblies which are rejected shall be [redacted] identified and removed from the production facility when the DCAS AND/OR CONTRACTOR decision is: Rejection. Salvage or re[redacted] can only be considered after Quality - Review Board recommendations are studied and approved by the cognizant military authority.

7. Change Control - There may be no change to the design, material, tolerances, processing, quality control plan, procurement sources, heat treat, inspection standards, nor shop operations or routings without the express written prior approval of the original contractor or the cognizant military authority.

7.1 Change Control Approval - Any request for change shall be the responsibility of the vendor to submit prior to the initiation of work on the contract and approvals must be on hand prior to the start of the operation on which the change is to be made.

8. Process and Inspection Approval - Prior to the award of a production contract, all process operations and all inspection procedures and details will be evaluated and confirmed by the cognizant DCAS inspectors to insure compliance with currently accepted aerospace industry standards. This will include all destructive and non-destructive methods, as well as quality control plans and sample sizes.

8.1. Process and Inspection Changes - As required in paragraph 7, no alteration or change in any operation, process, or inspection procedure may be made without prior review, evaluation, and approval by the original approval authority.

~~8.2. Process Deviation Approval - Deviations from approved processes or inspection standards require formal Material Review Board action and submission to the cognizant authority prior to commission, omission or deviation. Written approval is required prior to any deviation by the vendor.~~

9. Drawing Requirements - All drawings pertinent to the procurement of these critical bearings shall include the essential data and callouts in a format that complies with the following checklist. It shall be the responsibility of the original contractor to update his drawings for use by TSARCOM as directed in his current or follow-on contracts. That information not specifically noted on the checklist but essential for definition and control of significant characteristics will also be provided by the contractor in compliance with the intent of this specification. These drawings will be completed in a manner prescribed by ANSI Y14.5.

9.1. Drawing Checklist

items accepted 1, 2 & 1 v will be ✓

✓ 9.1.1. Type of bearing
✓ 9.1.2. Bore
✓ 9.1.3. O.D.
✓ 9.1.4. Width
✓ 9.1.5. AFBMA class
✓ 9.1.6. Number of rolling elements per row
✓ 9.1.7. Number of rows of rolling elements
✓ 9.1.8. Basic dynamic radial load rating per AFBMA
✓ 9.1.9. Basic static radial load rating per AFBMA

ARTHUR S. IRWIN CO.
Technology Consultants
Driftwood, R. F. D. 1
Semus Point, NY 14712

continued next page .....

9.1.10. Basic dynamic thrust rating where applicable
9.1.11. Basic static thrust rating per AFBMA where applicable
9.1.12. Radial internal clearance (total)
9.1.13. Gage load for determining radial clearance
9.1.14. Diametral clearance for retainer-to-piloting ring
9.1.15. Diametral clearance for retainer-to-non-piloting ring
9.1.16. Retainer overall width (MAX.)
9.1.17. Retainer end face parallelism
9.1.18. Retainer bore-to-O.D. concentricity
9.1.19. Pilot-ring Locating-diameter concentricity to pilot diameter

not identified on BN drawing

9.1.20. Rolling element to retainer pocket clearance
9.1.21. Rolling element complement pitch diameter
9.1.22. Rolling element clearance from tang or retention device in the operating (mounted) condition

B/V would prefer roller drop control

9.1.23. Retainer material and hardness
9.1.24. Retainer plating required and thickness (per AMS 2412).
9.1.25. Retainer plating corner build-up tolerance (OPTIONAL)
9.1.26. Retainer land-width in contact with the piloting diameter
9.1.27. Retainer details and dimensions (OPTIONAL)
9.1.28. Surface finish roughness A-A for rolling contact surfaces
9.1.29. Surface finish roughness A-A for mounting surfaces

information not required on bearing drawing

9.1.30. Surface finish roughness A-A for retainer and retainer piloting surfaces.
9.1.31. Lobing, waviness and chatter tolerances to operating and mounting surfaces. Peak to valley limits to be given for a range of lobes per circumference of from 3 to 33. (OPTIONAL)
9.1.32. Special surface texture modifications required (OPTIONAL)
9.1.33. Surface treatments or coatings required
9.1.34. Assembly cross corner dimensions required
9.1.35. Flushness requirements (where applicable)

add roller end to flange clearance

9.1.36. End play or end float limits
9.1.37. Gage load for end play check
9.1.38. Material for rings and rolling elements
9.1.39. Special heat treat required (where applicable)
9.1.40. Hardness range required
9.1.41. Bearing operating temperature range and the stabilization temperature required to provide against growth of elements or undesirable transformation products
9.1.42. Bearing material procurement, inspection and evaluation requirements to insure cleanliness, grain control, sufficiency of working after the ingot is formed and to provide documentation for traceability. (See 11)

should be a specification

9.1.43. Outer ring/inner ring details to prevent creep, circumferential motion or shifting
9.1.44. Description of details for special mounting or removing procedures

ARTHUR S. IRWIN CO. INC.
Technology Consultants
Driftwood Center
Bemus Point, NY 14712

continued next page .....

ARTHUR S. IRWIN CO. INC.
Technology Consultants
Driftwood Center
Remus Point, NY 14712

ORIGINAL PAGE IS
OF POOR QUALITY

9.1.45. Identification requirements other than standard military requirements
9.1.46. Packaging requirements (OPTIONAL)
This information should not be on design drawing → 9.1.47. Installation data
9.1.47.1. Housing fit, material & wall thickness
9.1.47.2. Shaft fit, material and wall thickness
9.1.48. Requirement for all evidence of nital etch staining to be removed from rolling contact surfaces (define method & stock removal)
9.1.49. Maximum diameter and/or length of rolling elements to be used with production retainers
9.1.50. Standard heat treat procedure or specification required
9.1.51. Inner ring high point to be identified (optional)

9.2. Cylindrical Bearing Requirements - In addition to the general requirements listed in paragraph 9.1, the following are required for cylindrical bearings.

9.2.1. Roller diameter
9.2.2. Roller length
9.2.3. Roller crown radius
9.2.4. Roller effective length
Roller flat length → 9.2.5. Roller crown drop coordinates
9.2.6. Roller end squareness
9.2.7. Roller corner radius runout with respect to roller cylindrical section
9.2.8. Roller corner ~~dimensions~~ break out
9.2.9. Roller end face finish A-A
9.2.10. Cage balance tolerance and balancing speed } optional
9.2.11. Cage diameter for locating during balancing }
9.2.12. Diameter variation within one roller set
9.2.13. Requirement, if any, for roller complement to be retained in the cage when removed from its associated ring
add out-of-round requirements → 9.2.14. Roller complement diameter variation ~~required~~

9.3. Ball Bearing Requirements

9.3.1. Contact angle
9.3.2. Inner ring groove radius as a percentage of ball diameter
9.3.3. Outer ring groove radius as a percentage of ball diameter
9.3.4. Shim thickness to be used when grinding split rings
9.3.5. Runout of split ring contact face with respect to the bore of the split ring
9.3.6. Ring groove diameter and tolerence (optional)
9.3.7. Gage load for measuring contact angle
9.3.8. Shim angle
9.3.9. Ball grade
9.3.10. Ball sphericity and ball complement diameter variation required
9.3.11. Ring grain orientation to be ~~substantially parallel to groove surfaces~~ controlled by customer approval
9.3.12. Cage balance required and balancing speed range along with diameter for locating during balancing
9.3.13. Identification required to insure alignment and load-sharing of matched sets of multi row bearings

continued next page .....

ARTHUR S. IRWIN CO. INC.
Technology Consultants
Driftwood Center
Bemus Point, NY 14712

9.3.14. Race depth as a percentage of ball diameter
9.3.15. Bearing preload, if any
~~9.3.16. Contact angle verification gage load~~
9.3.17. Ball groove wobble permissable
9.3.18. Standoff of ball groove from locating end face of ring (optional)

10. Inspection Processes - All inspection methods and processes must be approved and certified by the ~~cognizant military authority as delegated through DCAS.~~ CONTRACTOR
10.1 Inspection Methods to be certified
10.1.1. Hardness, metallurgical structure, austenite determination and material stabilization verification
10.1.2. Decarburization determination
10.1.3. Grinding burn detection and evaluation
10.1.4. Magna~~flux~~ Barrel evaluation
10.1.5. Visual defect examination and evaluation
10.1.6. Ultrasonic inspection for subsurface defects
10.1.7. Fluorescent penetrant inspection for surface defects
10.1.8. Surface texture evaluation and control
10.1.9. Plating process control and verification
10.1.10. Coating process control and verification
10.1.11. ~~Shot blast~~ peening process control and verification
add eddy current
10.1.12. Quality control verification and traceability
10.2. Material Review Board
10.2.1. There shall be provided a formal Material Review Board procedure and activity which shall be verified by the procuring agency representative and it shall be presented to the cognizant military authority for approval in writing.
10.2.2. Material Review Board members shall be certified to the CONTRACTOR ~~DCAS~~ representative and shall not be replaced without acknowledgement by the cognizant military authority.
10.2.3. The Material Review Board shall be the only representative of the contractor authorized to communicate with the DCAS representative and request deviations.
10.3. Inspection Standards
10.3.1. Standards of acceptance for all inspection processes to include dimensional masters shall be traceable to the National Bureau of Standards or shall be proved equal in control and verification to industry standards.

continued next page .....

ARTHUR S. IRWIN CO. INC.
Technology Consultants
Driftwood Center
Bemus Point, NY 14712

ORIGINAL PAGE IS
OF POOR QUALITY

Material spec for M-50 appears to be acceptable. Specifications for carburizing materials and 52100 steel should be included. M-50 steel may not be the best material for transmission bearings.

11. Material - Rings and Rolling Elements
Type: AISI M-50 HIGH SPEED STEEL, VACUUM INDUCTION MELTED AND VACUUM ARC REMELTED MATERIAL FOR BALL AND CYLINDRICAL ROLLER BEARINGS

11.1. SCOPE:

11.1.1 This specification covers ~~High Speed~~ Forgings, forging stock, mechanical tubing bars, rods, and coils to be used in the manufacture of high quality ball and roller bearings.

11.2. PROCESS:

11.2.1 The steel/electrode shall be produced employing vacuum induction melting process during initial melting, followed by remelting employing vacuum arc remelting (consumable electrode) process. The initial electrode shall be both melted and cast under vacuum.

11.2.2 For manufacture of bearings in this category, the bearing supplier shall purchase, control and test raw material to this specification and certify conformance thereof.

11.3. REFERENCED SPECIFICATIONS:

The following documents are integral parts of this specification. (Use latest issue of each.)

11.3.1 Aerospace Material Specifications:

AMS 2808	Identification, forgings
AMS 2259	Chemical check analysis limits
AMS 2300	Premium Aircraft-Quality Steel Cleanliness Magnetic Particle Inspection Procedure
AMS 2251	Tolerances, low alloy steel bars
AMS 2253	Tolerances, carbon and alloy steel tubing
AMS 2310	Qualification sampling of steels, transverse tensile properties
AMS 2350	Standards and test methods
AMS 6491	VIM-VAR AISI M-50 steel

11.3.2 American Society for Testing and Materials:

ASTM E112	Estimating the average grain size of metals
ASTM E350	Chemical analysis of carbon steel, low alloy steel, silicon electrical steel, ingot iron and wrought iron

ARTHUR S. IRWIN CO. INC.
Technology Consultants
Driftwood Center
Bemus Point, NY 14712

ASTM A604 Macro etch testing of consumable electrode vacuum arc remelted steel bars and billets

11.4. CHEMICAL COMPOSITION:

11.4.1 The steel shall conform to the following requirements as to Chemical Composition:

Element			
Carbon	0.80 - 0.85	Chromium	4.00 - 4.25
Manganese	0.15 - 0.35	Molybdenum	4.00 - 4.50
Phosphorus	0.015 Max.	Vanadium	0.90 - 1.10
Sulfur	0.008 Max.	Nickel	0.15 Max.
Copper	0.10 Max.	Cobalt	0.25 Max.
Silicon	0.25 Max.	Tungsten	0.25 Max.

11.4.2 A chemical analysis shall be obtained and reported for the master heat for all elements listed in Para. 4.1. In addition to the heat analysis, each remelt V.A.R. ingot shall be analyzed for carbon and manganese.

11.4.3 Check analysis may be made by the purchaser in accordance with the latest revision of ASTM 59 and AMS 2259 with the exception that check limits for carbon shall be -0.01 under min. in lieu of ±0.03 per AMS 2259.

11.5. FORM AND CONDITION:

The material shall be supplied in annealed and centerless ground or turned with a surface finish of 125 RMS or better as necessary to perform immersion ultrasonic test requirements per Para. 6.7. Bars or forging rounds shall have a max. hardness of BHN 229.

11.6. QUALITY TESTS:

11.6.1 Material shall be uniform in quality and condition, clean, sound and free from foreign materials and from surface and internal defects detrimental to fabrication or to performance of parts. The material shall have ~~substanc~~ ~~tially~~ uniform macrostructure and grain flow.

11.6.2 The manufacturer shall be held responsible for the quality of the material being furnished and shall make the necessary tests to insure this quality.

ARTHUR S. IRWIN CO. INC.
Technology Consultants
Driftwood Center
Bemus Point, NY 14712

ORIGINAL PAGE IS
OF POOR QUALITY

11.6.3 Magnetic Particle Stepdown Test:

11.6.3.1 Specimens shall be taken from 4 inch square billets representing the top and bottom of each ingot.

11.6.3.2 Specimens shall be inspected in accordance with AMS 2300.

11.6.4 Macroetch:

11.6.4.1 Billet Inspection: Transverse disc sections shall be cut from both ends of all billets or bars prior to rolling into bars or extrusion into tubes. The samples shall be etched in accordance with ASTM A604 in hot hydorchloric acid and water (1:1) at 160-180°F for sufficient time to develop a well-defined macrostructure.

11.6.4.1.1 Samples shall show freedom from pipe, porosity, inclusions, segregates or segregation.

11.6.4.1.2 Samples shall exhibit macrostructure equal or better than the following macrophotographs of ASTM A604:

Class	Condition	Severity
1	Freckles	A
2	White Spots	A
3	Radial segregation	A
4	Ring pattern	A

11.6.4.2 Finish Product Inspection:

11.6.4.2.1 Transverse disc sections shall be removed from both ends of all bars and tubes and etched in accordance with ASTM A604 in hot hydrochloric acid and water (1:1) at 160-180°F for sufficient time to develop a well-defined macrostructure.

11.6.4.2.2 Samples shall show freedom from pipe, porosity, inclusions, decarburization, seams, internal or external defects.

11.6.4.2.3 If samples are representative of material prior to centerless grind/turn operation, any surface defects, seams or decarburization must be within the stock removal zone.

11.6.4.2.4 Samples shall exhibit no evidence of segregation when examined visually (no magnification).

11.6.5 Grain Size:

The grain size shall be 8 or finer with occasional grains as large as 5 permissible when determined in accordance with procedures prescribed in ASTM E112.

11.6.6 Inclusion Content:

Radial specimens, approximately 0.28 sq. in. in surface area shall be taken midway between center and surface of transverse discs removed from billet/bar representative of the top and bottom of each ingot. The hardened specimens shall be polished on a face longitudinal to the direction of rolling and rated for inclusion content in accordance with the Jernkontoret Chart, Method D, Plate III of ASTM E45. No specimen shall exceed the following limits:

Inclusion Rating

Type	A	B	C	D
Thin	1.5	1.0	1.0	1.5
Heavy	1.0	0	0	0

11.6.6.1 For types A, B and C thin combined, there shall be not more than three fields of No. 1.5A type or No. 1.0B and C types and not more than five other lower rateable A type thin fields per specimen. For type D thin, there shall be not more than three No. 1.5 fields and no more than five other lower rateable D type thin fields per specimen.

11.6.6.2 A rateable field is defined as one which has a type A, B, C or D inclusion rating of at least No. 1.0 thin or heavy in accordance with the Jernkontoret Chart, Plate III, ASTM E45.

11.6.7 Ultrasonic Inspection:

11.6.7.1 All bars and forging rounds shall be immersion ultrasonic tested in accrodance with approved procedures.

11.6.7.2 The ultrasonic test shall cover both shear and longitudinal directions and be calibrated to reject the following defects:

Direction	Size and Type
Shear	.002 x .050 slot
Longitudinal	20% of 1/64 in. flat bottomed hole - Depth: half of section dim.

11.7. DECARBURIZATION AND SURFACE DEFECTS:

Bars ~~or tubes~~ shall be of surface condition or centerless ground to a finish commensurate with ultrasonic testing requirements.

11.8. TOLERANCES:

Unless otherwise specified, tolerances shall conform to the following:

11.8.1 Bars: Latest issue of AMS 2251, as applicable

11.8.2 Tubing: Latest issue of AMS 2253, as applicable to Mechanical Type

11.9. REJECTIONS:

Material not conforming to this specification or to authorized modifications will be subject to rejection.

11.10. INSPECTION:

11.10.1 The bearing supplier shall be responsible for assuring that all tests and inspections promulgated in this specification are performed.

11.10.2 Material accepted by the ORIGINAL purchaser, which subsequently reveals defects not detected during inspection, is subject to rejection.

11.10.3 Test methods to be followed shall be in conformance with the ASTM issue listed in AMS 2350, when ASTM methods are specified.

11.11. MATERIAL CERTIFICATION:

11.11.1 The bearing supplier shall require and maintain complete certification for all raw material.

11.11.2 The material certification shall contain the following information:

1. Mill source.
2. Purchase order number
3. Heat numbers
4. Quantity per heat
5. Material specification number (inc. revision number)
6. Size
7. Numerical results of specified tests
8. When material capability requirements are specified, vendor must certify either actual test data or certify capability
9. Chemical analysis
10. Condition of material supplied, i.e. hot rolled, hot rolled annealed cord drawn, etc.
11. Results of MPI tests
12. Results of non-metallic inclusion ratings
13. Results of ultrasonic testing

ORIGINAL PAGE IS
OF POOR QUALITY

SPECIFICATION - OPTIMIZED BEARING UTILIZATION

SCOPE: This specification will cover the cleaning, dismantling, inspection re-evaluation, segregation and rework of bearings which require no refurbishment. It will also provide for those bearings which require restoration and refurbishment.

CLEANING: All bearings will be subjected to ultrasonic cleaning in a fluid approved for the process such as: Freon or other OSHA acceptable materials which can remove the decomposed lubrication products and dirt on the various surfaces. It is particularly important in this process that filtration be provided to eliminate all particles greater than 5 microns in size at a rate equal to the total volume being processed through the filter every five minutes. Further, it is essential that the filtered material be supplied through a separate hose and nozzle for washing through the bearing, purging from it any accumulated contaminates. The bath in which the bearings are suspended shall be excited ultrasonically by an approved method so that particles within the bearing will be kept in motion and suspended in the fluid.

PRELIMINARY INSPECTION: After cleaning and drying, bearings will be dismantled partially to separate the inner ring (or outer ring) from the roller/retainer assembly. It will be found that some bearings are so designed that the rolling element retainer assembly can be removed intact and will then be available for inspection separately. In these bearings it is possible to make a complete study of the rolling contact surfaces of the individual rings and to subject them to NDT evaluation.

After the separation of the components from the assembly, a preliminary inspection shall be conducted to separate those which obviously are not capable of continued utilization. Those demonstrating badly scarred surfaces, temper colors due to overheating, galling, deep scores, impact damage resulting in severe brinells obvoius to the eye, unmagnified, shall be scrapped. Similarly, impact damage resulting in rupture of the surface and tearing of the surface shall be cause for scrapping.

NDT EVALUATION: Components separated and cleaned and having passed preliminary inspection and considered acceptable for further evaluation will be subjected to magnaflux, ~~eddy current, ultrasonic magnetic resonance~~, fluorescent particle penetrant examination and others that may be added in the future.

Indications, on any surfaces, visible to the naked eye or exceeding the standards established for aircraft quality rolling element components shall be scrapped at this time.

continued next page .....

VISUAL EXAMINATION OF ROLLING CONTACT SURFACES: Utilizing a 2 to 5 power magnifying glass, all rolling contact surfaces will be visually inspected to detect cracks, tears, operating smears due to sliding or insufficient lubrication. In addition, any evidence of tempering indicating exposure to excessive temperatures shall be cause for rejection. ~~Should there be any question as to tempering of the surface, the parts shall be subjected to nital etch inspection in accordance with standard procedures. Evidence of nital etch is to be removed by vibratory finishing prior to reassembly of the bearing~~.

When it is found that all components of a bearing have passed the above examination satisfactorily, they may be reassembled as sets (as they originally were removed from service) for continued use. Parts from two or more bearings must not be mixed.

VISUAL EXAMINATION OF RING MOUNTING SURFACES: The mounting surfaces of inner rings and outer rings shall be examined and dimensionally verified to insure that their operating dimensions have not been modified due to wear or build-up during operation. Where such evidence is present and detected dimensionally, such bearings require regrinding and the complete assemblies shall be reclassified as requiring restoration. only as required

DIMENSIONAL VERIFICATION: General accumulation of fretted material which is of such a nature as to only increase the average diameter of the O.D. or reduce the average diameter of the I.D. may be considered for additional verification. Local polishing to remove such spots may be acceptable, providing the original grinding nap is not destroyed in the adjacent areas. Where local buffing has been successful, the parts shall be verified dimensionally to insure that local areas not exceeding 5 degrees of arc around the circumference, nor greater in width than 1/10 of the overall length below the original surface can be considered acceptable. The assembly can be reconstituted with these components.

Where such efforts are not successful, it will be necessary to set the parts up for regrinding, in which case .002 in. material thickness per side shall be removed prior to replating and regrinding.

VISUAL EXAMINATION OF RETAINER WEAR AREA: The locating surfaces for the retainer contacts with the ring flanges shall be examined to insure against detrimental wear which has resulted in pickout or welding/galling of these areas. Where only general wear is found, these parts shall be examined dimensionally to insure that only those parts with less than .0005 in. wear on the diameter shall be used in assemblies to be made of the original components.

Where the pilot surface retainer demonstrates some wear, it is essential that the rolling elements be removed from the pockets in at least 2 sectors of the retainer to insure against detrimental wear in this area. If the wear does not exceed .0005 in. the reassembly can be performed with these components, with the rolling elements restored to their original pockets.

DETERMINATION OF NEED FOR RETAINER NDT EXAMINATION AND REPLATING: Where there is significant wear on the retainer as to cause it to be rejected for immediate reassembly, the plating shall be stripped and the part shall be subjected to NDT examination depending upon its original material. Ferrous materials will be magna[redacted]. Non-ferrous materials will be subjected to fluorescent penetrant examination.

After passing this examination with no evidence of cracks, especially near the base of the tangs or in the end rings of the retainer, the parts shall be replated and restored to the bearing after verification of its after-plating dimensions to the requirements of the original drawings.

DETERMINATION OF THE NEED FOR RESTORATION: Where there is evidence of surface deterioration, such as galling, frosting, micro-spalling, or light brinell marks of less than .002 in. in depth; the components of an assembly shall be restored via the following steps.

Re-establish the mounting surfaces and locating surfaces of the bearing.

These surfaces shall be ground undersize approximately .002 in. on the side, replated and reground to original bearing dimensions and tolerances. define plating

STANDARD RACE GRINDING STOCK REMOVALS: If the race surfaces are rejectable by applicable standards, they may be reground to remove MAX OF .003 in. per side (material thickness) from each race. Care must be exercised to prevent metallurgical deterioration (burning) due to excessive pressure and friction from the grinding wheel. During this operation it is essential that the original locating surfaces shall have been determined and that the part shall be mounted on the spindle or chuck so that the centrality of the raceway groove shall be maintained with respect to the original mounting surfaces. This process shall be monitored by nital etch inspection to insure that grinding burns have not been introduced into the components. Evidence of the nital etch examination subsequently shall be removed by vibratory finishing under approved methods.

REINSPECTION FOR VERIFICATION OF DIMENSIONAL DETAILS: All characteristics shall be evaluated 100% to insure compliance with the original drawing requirements except for the raceway dimensions which shall be .006 in. different from the original.

PROCUREMENT OF REPLACEMENT ROLLING ELEMENTS: Procurement and evaluation of materials shall be in accordance with the Critical Bearing Procurement Specification.

continued next page .....

Inspection process to verify dimensions and grinding control shall be in accordance with requirements spelled out in the original bearing procurement specification.

GRADING AND MATCHING OF DIAMETERS AND ROLLER LENGTHS TO RING SETS: All rings shall have been measured with diameters and cross-race dimensions such as flange to flange dimensions or race curvatures recorded so that the appropriate diameter and length of rollers or balls shall be made available to provide for the original drawing functional geometry.

PREASSEMBLY VERIFICATION OF DIMENSIONS OF MATCHED PARTS: Suitable quality control plans must be available and followed to insure that, in matching of parts, there are no deviations permissable and the assemblies are completed with components that will provide for the proper clearances and rolling element diameter and length variations.

ASSEMBLY: All components will be processed through an ultrasonic cleaner to insure against any particulate contaminant and/or corrosive materials. Parts shall be subjected to spot checks to assure absence of corrosion. All parts will be coated with the appropriate material, ~~as called out on the original drawing of bearing drawing procurement requirements~~. Assembly shall be completed in accordance with a written assembly process which will be available to the military inspector for his verification and audit.

POST ASSEMBLY INSPECTION: There shall be a 100% inspection of the assembled bearings to assure:

A. Proper internal clearance
B. Proper rotation and freedom of the retainer - ball or roller set
C. Proper clearance between the rolling elements and the retainer tang in the assembled bearing (if applicable)
D. Smooth operation free from any clicks, rubbing, noises or catches apparent by feel of the inspector.

MARKING, CODING AND SEGREGATION FOR PACKAGING: This shall be accomplished in accordance with the original drawing requirements. define special marking for remark not on original drawings

SAMPLING FOR QUALIFICATION TESTING AND SCAS VERIFICATION: The appropriate military authority shall, after consultation with the original contractor and bearing manufacturer, establish a qualification test and sampling plan to which the original lot from each re-manufacture or restoration manufacturer shall be subjected.

Subsequent sampling for qualification testing shall be at the discretion of the appropriate military authority.

BOEING VERTOL COMPANY

P.O. Box 16858
Philadelphia, Pennsylvania 19142

7484-JWL-068

February 18, 1983

Arthur S. Irwin Company, Inc.
Driftwood Center
Bemus Point, New York 14712

Subject: Carburizing Steels Used in Helicopter Drive System Bearings

Reference: Letter dated February 10, 1983 from Arthur S. Irwin

Dear Art:

There are several grades of carburizing steels used in the helicopter drive system bearings at Boeing Vertol. These materials can be used for the fabrication of one element (inner or outer race) or for the complete bearing. Our experience with carburized steel bearings has been very good. The attached table will list the carburizing steel which have been used and specifications to which the material is certified. The Boeing Vertol specifications listed are for VIM-VAR and immersion ultrasonic inspected material.

If you have any questions concerning these materials, please contact me.

Sincerely,

BOEING VERTOL COMPANY

J. W. Lenski Jr.
Senior Engineer

/mj

Attachment

SUMMARY OF CARBURIZING STEELS

USED AT BOEING VERTOL

BEARING MATERIAL	SPECIFICATION FOR OLDER AIRCRAFT	PREFERRED SPECIFICATION NEW AND FUTURE AIRCRAFT
SAE 9310	AMS 6265	BMS 7-249 TYPE III (VIM-VAR UTS)
SAE 8620	AMS 6276	--
SAE 4340	AMS 6415	BMS 7-250 (VIM-VAR UTS)
HIGH HOT HARDNESS CARBURIZING STEEL (5CR-1.4MO-1.35W) "VASCO"	--	BMS 7-223 TYPE III (VIM-VAR UTS)
OTHER LESS USED STEELS: CEVM 4620 CEVM 4320 CEVM KRUPP (3310) CEVM CBS 600 (HIGH HOT HARDNESS)		

BOEING VERTOL COMPANY

P.O. Box 16858
Philadelphia, Pennsylvania 19142

June 2, 1983
8-7484-JWL-105

Arthur S. Irwin Co., Inc.
Driftwood Center
Bemus Point, New York 14712

Subject: Specifications for Ball and Cylindrical Roller Bearings and Rework and Restoration of Aircraft Engine and Power Transmission Bearings

Dear Art:

I am sorry that I was unable to attend the Industry Coordination Meeting in Cleveland on June 1 and 2. I have reviewed the subject specifications and would like to provide the following comments for your information.

o Review of Specification for Ball and Cylindrical Roller Bearings

The specification date, April 29, 1983, appears to be acceptable to Boeing Vertol as presented. All of the problem areas stated during the January meeting have been corrected. Presently, Boeing Vertol is working to the basic requirements of this specification for all new and future bearing designs. We feel that these requirements are essential for controlling the design, quality and performance of helicopter transmission bearings. The only area of this specification that may cause some problems at Boeing Vertol is Section 8. Our present system of drawing format will have to be modified to meet the three sheet format requested. Presently, installation and operating data are not included on drawings but are generally placed in the drive system stress report for each helicopter. Although all critical bearing data is available at Boeing Vertol, it may be difficult for an outside source to easily locate this information. I feel that your proposed requirement would alleviate this problem.

Section 10 (Material) is acceptable to Boeing Vertol if the bearing vendors can provide material to this specification. Boeing Vertol depends upon the bearing vendors to provide the material to manufacture the bearings. The better the quality and control of the material, the better the performance of the bearings should be. Boeing Vertol has improved on the quality of the gear steels used in the helicopter but we depend upon the bearing companies to continue to improve on the quality of bearing steels. Unless there are major problems with meeting the requirements of this section, Boeing Vertol agrees with the material specification, as presented.

ORIGINAL PAGE IS
OF POOR QUALITY

Other than a few typing errors (MIL-I-7808 versus MIL-L-7808, etc.), Boeing Vertol does not recommend any changes to the proposed specification. Our present bearing drawings and control requirements for critical bearings (D210-10302-1) appear to comply with this specification. Therefore, we see no problems with meeting this specification for all future bearing designs. If this specification was added to existing designs, substantial cost increase and delays in procurement of bearings would be expected.

o <u>Review of Specification for Rework, Refurbishment and Restoration of Aircraft Engine and Power Transmission Cylindrical and Ball Bearings</u>

Boeing Vertol has not been involved in any rework, refurbishment or restoration of any bearings except for planet gear/bearing assemblies. The rework of planet gear/bearing assemblies is conducted by the original bearing supplier. Only the gear is returned and a new inner race and roller assembly is installed and the assembly reidentified. All other bearings which may be overhauled at Boeing Vertol are inspected to requirements similar to NAVAIR 01-1A-503. Only minor repair (buffing or polishing) is conducted during this inspection.

The requirements of this specification are esential for controlling rework of bearings. Due to the critical design and tolerances of power transmission bearings, it is important that only qualified sources be approved for this type of work. Boeing Vertol feels that only the original bearing supplier should be selected for rework of a given bearing. Until the experience and skill levels are achieved at the Army depot level, refurbishment and restoration of bearings should only be done by the original contractor.

The need for reworking bearings is increasing daily, but until adequate controls and service experience can be obtained on reworked bearings, rework of critical bearings should be approached with caution.

Sincerely,

J. W. Lenski, Jr.

Detroit Diesel Allison
Division of General Motors Corporation

Indianapolis Operations
P.O. Box 894
Indianapolis, Indiana 46206-0894
Phone: (317) 242-5000
Cable: GM COMM IND A

February 15, 1983

File No. A0490

Arthur S. Irwin, Co., Inc.
Driftwood Center
Bemus Point, New York 14712

Attention: Mr. Arthur S. Irwin

Dear Mr. Irwin:

During the meetings of January 24 and 25, 1983 at Cleveland with representatives of your company, NASA-Lewis Research Center, U. S. Army and U. S. Air Force, aircraft engine and airframe builders and rolling element bearing manufacturers two proposed military specifications were discussed in considerable detail. The first specification covers the requirements for the qualification and procurement of critical engine and propulsion powertrain rolling element bearings. The second specification is described as optimized bearing utilization and covers the requirements for determining if used rolling element bearings are in need of reworking and if they are in need of reworking how this should be done.

It is in response to your request for written comments from the attendees that the following comments are made. Where appropriate these comments are referenced the proposed specification copies distributed at the above meeting with these comments further referenced in terms of page numbser, section number or heading, paragraph number and line number. Where comments outside of the discussion and consensus at the above meeting are necessary such rationale is also included.

Specifications for Ball and Cylindrical Roller Bearings. This specification apparently was prompted by the material requirement for hot hardness properties provided by M50 tool steel. The inherent brittleness of this material causing at times very rapid crack propagation and ultimate failure has given concern towards using other or alternate materials.

DA 1-1 (4-82)

Page 1, Section 1. Consider specifying which materials are covered by this specification. Also, consider this specification referring only to ball and cylindrical roller bearings.

Page 1, Section 2. Apparently "MIL-STD-10" should be changed to "MIL-STD-100", Specifications MIL-STD-1535, MIL-STD-1520, AMS-6415 and ASTM 584 should also be considered for inclusion.

Page 1, Section 4, line 2, "100% inspected" should be changed to "100% non-destructively inspected".

Page 1, Section 4, line 3. Change "contractor" to "sub-contractor". Change "DCAS inspector" to "Government authority or equivalent".

Page 1, Section 4, lines 4 and 5. Delete words following "contracting authority".

Page 1, Section 4, line 4. Replace "Sample plans" with "Approved sample plans".

Page 2, Section 6. Include the contractor in the decision making process.

Page 2, Section 7. Add facilities to the group of no change items.

Page 2, Section 8, line 1. Replace "Prior to" with "After".

Page 2, Section 8. Include the contractor in the decision making process.

Page 2, Section 8, line 4. Replace, "accepted aerospace industry standards" with a better definition.

Page 2, Section 8.1, line 2. Replace "operation" with "specification".

Page 2, section 8.2. Delete this section.

Page 2 and 3, section 9.1. Identify on the drawing as engineering data or reference items 9.1.8, 9.1.9, 9.1.10, 9.1.11, 9.1.14, 9.1.15, 9.1.21, 9.1.36 and 9.1.41.

Page 3, Section 9.1. Consider deleting items 9.1.16, 9.1.17, and 9.1.25.

Page 3, Section 9.1. List as a reference dimension items 9.1.22, 9.1.36 and 9.1.37.

Page 3, Section 9.1. Sharpen the definition of 9.1.27.

Pages 3 and 4, Section 9.1. Use another specification to cover items 9.1.32, 9.1.29, 9.1.42 and 9.1.48.

Page 4, Section 9.1.47. Consider omission.

Page 4, Section 9.1.51. Add "if required".

Page 4, New Section 9.1.52. Add ball or roller drop.

Page 4, Section 9.2.1. Add "and roundness".

Page 4, Section 9.2.3. Add "and flat length".

Page 4, Section 9.2.7. Add "when required".

Page 4, Section 9.2.8. Consider specifying in terms of breakout dimensions and end blend requirements.

Page 4, Section 9.3.1. Add "specified as required".

Page 4, Section 9.3. Identify as reference dimensions items 9.3.4 and 9.3.8.

Pages 4 and 5, Section 9.3. Add "if required" to items 9.3.5, 9.3.7, 9.3.11, 9.3.14 and 9.3.15.

Page 4, Section 9.3.11. Add orientation angle dimension.

Page 4, Section 9.3.12. Replace "balance required" with "balance as required".

Page 5, Section 9.3. Delete items 9.3.16 and 9.3.18.

Page 5, Section 9.3.17. Correct "permissable" to "permissible".

Page 5, Section 10, line 2. Replace "certified by the cognizant military authority as delegated through DCAS", with "certified by the prime contractor".

Page 5, Section 10.1. Replace "Methods to be certified" with "Methods and Processes to be Certified".

Page 5, Section 10.1.2. Add "decarburization allowed on nonfunctional surfaces".

Page 5, Section 10.1.4. Replace "Magnaflux evaluation with, "Magnetic particle inspection evaluation".

Page 5, Section 10.1.5. Replace "Visual" with "Surface".

Page 5, Section 10.1.11. Replace "Shot bead peening" with "Peening".

Page 5, New Section 10.1.13. X-Ray Diffraction.

Page 5, New Section 10.1.14. Magnetic perturbation.

Page 5, Section 10.2. Consider deleting items 10.2.2 and 10.2.3.

Page 5, Section 10.3.1. Consider if dimensional masters may be traceable to a source other than the National Bureau of Standards.

Page 6, Section 11.1.1. Replace "High Speed Forgings, forging stock, mechanical tubing bars" with "forgings, forging stock, tubing, bars".

Page 6, Section 11.3.1. Consider adding AMS 2375.

Page 7, Section 11.3.2. Consider replacing, "ASTM E604" with "ASTM A604".

Page 7, Section 11.4.1. Replace "Chemical Composition" with "chemical composition".

Page 7, Section 11.4.3, line 3. Clarify minimum carbon requirement so as to assure desired hardenability.

Page 8, Section 11.6.3. Add "With no additional ultrasonic test required".

Page 9, Section 11.6.6, table. Change ratings for heavy; B, C and D types from "0" to "1.0".

Page 9, Section 11.6.6.1. Include limits for heavy fields.

Page 9, Section 11.6.7.1, Line 2. Correct "accrodance to "accordance".

Page 10, Section 11.10.2, line 1. Replace "the purchaser" with "the original purchaser".

Specification - Optimized Bearing Utilization. This specification apparently was sought to provide the Armed Services greater capability to overcome, 1) uncertainty of procurement, especially during wartime conditions, 2) lack of availability from "too few" approved sources, and 3) logistics constraints imposed by current procurement and inventory practices. Should this specification lead to reworking the individual components of a given bearing, especially for the critical surfaces and geometry internally, the impact on continued field usage could well be expected to be premature failure, perhaps catastrophic. Such undesirable possibilities are enhanced by lack of skill, facilities, and expertise on the part of those actually doing the reworking. It is well known that fatigue damage is not easily measured before spalling is visually seen. Further the fatigue damaged material is not totally removed by machining to arbitrary depths of 0.002 or 0.003 inches. Thus, the reworked bearing is only capable of continuing to provide satisfactory service with an appreciable handicap.

Some may argue that the service life of a rolling element bearing is primarily limited by such conditions as wear, contamination, lack of lubrication and abuse in handling and not fatigue life. However, the load carrying capacity and the corresponding expected fatigue life are still important considerations in selecting bearings in any design and it would not seem prudent to fall short in this area.

Of at least as great an importance as the reprocessing of bearings is the impact that each bearing in any mechanism has on the reliability of the total system. There should be less willingness to rework a critical bearing than to rework a non-critical bearing.

More detailed comments to this proposed specification below.

Page 1, section on cleaning. Include alternate cleaning methods and whether the bearings are to be cleaned in the assembled or disassembled condition.

Page 1, section on preliminary inspection, paragraph 2. Degree of distress should be described in terms of limiting dimensions.

Page 1, section on NDT evaluation, paragraph 1, line 3. Eddy current testing may not be necessary.

Page 1, section on NDT evaluation, paragraph 1, line 4. Delete "magnetic resonance".

Page 1, section on NDT evaluation, paragraph 1, line 5. Replace "others that may be added in the future" with "others as required by the original manufacturer".

Page 3, section on standard race grinding stock removals. Grinding removal amount seems too arbitrary. Residual stresses resulting from grinding feeds, speeds and grits appear uncontrolled.

Page 3, section on reinspection for verification of dimensional details, line 3. Grinding removal amount seems arbitrary.

Page 4, section on preassembly verification of dimensions of matched parts, line 3. Correct "permissable" to "permissible".

Page 4, section on sampling for qualification testing and SCAS verification, paragraph 1, line 1. Replace "SCAS" with "Military".

Additional comments:

1. New parts replacing used parts should be coded for traceability.

2. Some position should be clarified as to liability in case of an accident caused by a bearing having reworking processing and/or having sub-components from sources different from those for the original bearing.

R.N.S. Scheidt

R.N.S. Scheidt
Staff Research Engineer
Technical Services, R&D
Transmission Engineering

RNSS/bjs
cc:

GENERAL ELECTRIC

AIRCRAFT ENGINE GROUP

GENERAL ELECTRIC COMPANY . . . . . 1000 WESTERN AVENUE
LYNN, MASSACHUSETTS 01910, Phone (617) 594-0100

Subject: Industry Coordination Meeting
on NASA Contract NAS3-23520
Rolling Element Bearings

February 10, 1983

Arthur S. Irwin Co., Inc.
Bemus Point
New York 14712

Dear Sir:

Comments and recommendations are hereby transmitted concerning your industry coordination meeting held in Cleveland 24, 25 January, 1983.

Also attached are copies of my expense report and receipts showing the cost (in the amount of $240.23) associated with attending the subject meeting (see attached expense account remarks).

Very truly yours,

C.B. Pineo

CARROLL B. PINEO
Principal Engineer, Bearings & Lube Systems
Lynn Product Engineering Department

attachments

/m

SPECIFICATION - OPTIMIZED BEARING UTILIZATION

Much of the inspection and handling procedures for new and used rolling contact bearings are well covered in the technical manual, "Maintenance of Aeronautical Antifriction Bearings for Organizational, Intermediate and Depot Maintenance Levels". This manual is identified as:

NAVAIR 01-1A-503
TM55-1500-322-24

It is recommended that this manual be adopted in situations where the prime contractor has not issued similar service limits and instructions, regarding bearing cleaning, handling and inspection.

In addition, it is also recommended that the efforts of the Joint Service Committee on Bearing Refurbishment headed by Dr. J. Dill at Wright-Patterson be utilized to the fullest extent during the formulative period to avoid duplication of effort and to promote uniform terminology.

It is also suggested that the prime contractor's recommendations be sought regarding which bearings are to be refurbished and what category or degree of refurbishment should be permitted.

Specific Paragraphs

Cleaning

Adopt NAVAIR 01-1A-503 or technical order of prime contractor.

Preliminary Inspection

Prior to inspection, bearings need to be classified for the degree of refurbishment to be performed and disposition according to configuration (separable vs. non-separable) and defect types for which no refurbishment is permitted. Need to carefully define terminology such as "scrap" when the intent is further disposition or not fit for refurbishment.

NDT Evaluation

Need to address this phase of inspection for bearings in the completely dismantled state. Some apparent inconsistencies exist here:

If bearing is already dismantled, then a decision has already been made to refurbish it. Normal practice is then to discard rollers, cage; salvage rings which could be FPI/MPI inspected at that time. All other NDT processes would not apply to the used raceways due to surface imperfections which cause too much "background scatter" or which cannot be interpreted. Same reasoning applies to balls except snap in ball cage design may allow cage re-use.

CB Pineo GE

Visual Examination of Rolling Contact Surfaces

Use limits provided by prime contractor in technical order manuals. If none exists, adopt NAVAIR 01-1A-503.

Visual Examination of Mounting Surfaces

Limits and reclassification per prime contractor technical order, or adopt NAVAIR 01-1A-503.

Dimensional Verification

Use prime contractor technical order instructions and limits. If none exist, establish limits and instruction for each component to be refurbished by item number and part number so that bearing application considerations are properly addressed.

Do not agree that removal of a fixed amount of material is the way to go. Suggest that stock removal up to a limit specified for each part number as recommended by the prime contractor.

Visual Examination of Retainer

This section should be in two parts: those nonseparable from the bearing, bent tang, riveted and those where elements can be snapped in and out without damage or deformation.

Use technical order limits of prime contractor or request limits to be established.

Determination of Need for Retainer NDT Examination and Replating

Normally, serviceability limits permit some wear through plating into base material. Generally, wear through the plate into the base metal is in cage pockets, or scoring on the guide lands.

Wear into base metal may also include embedded debris which must be removed prior to plating. This could mean machining of cage after stripping. Economically, it would seem better to replace the total cage with a new one at this point.

Should address above conditions, stock removal permitted, plate thickness, clearance allowed, and control of all processes associated with this.

ABPinco GE

Determination of the Need for Restoration

If this paragraph refers to mounting surfaces, it appears that regrinding must be set up from the raceways which is backwards from original manufacture. There is serious question if this can be done on existing equipment and, if so, the potential damage to the raceways either due to distortion or tooling is worrysome. Accuracy required is per original requirement.

Recommend removal of local high metal and expansion of serviceability limits be substituted for regrind/replate.

Standard Race Grinding Stock Remove

Need same process control here that is applied to original manufacture. Speeds, feeds, stock removal per pass, contour accuracy, control of residual stress, etc., etc.

Reinspection for Verification of Dimensional Details

6 mil change for each raceway results in 12 mil change to rolling element. Change wording to ".....original drawing requirements and refurbishment drawing allowable modifications."

Procurement of Replacement Rolling Elements

Add heat lot and grind lot traceability requirements.

Grading and Matching of Diameters and Roller Lengths to Ring Sets;

Preassembly Verification....Matched Sets.

Need to define process control for all these items similar to prime contractor requirements placed on original vendor's processes.

Post Assembly Inspection

Please refer to all the items deemed subject to inspection on the proposed TSARCOM bearing specification. Quality plan is required.

Sampling/Qualification etc.

Also see Refurbishment Committee effort, re Dr. J. Dill, Wright Field.

CB Price G.E.

C-2

January 31, 1983

TSARCOM PROPOSED BEARING SPECIFICATION

General Comment

It is recommended that the proposed specification be redirected to establish prime contractor requirements for the preparation of bearing drawings and specifications rather than for the actual drawing format and specifications.

This will allow present prime contractors who now comply to the intent of this proposed specification to continue to use their existing standards, drawing formats and specifications without unnecessary changes.

Prime contractor authority and responsibility for implementation of all aspects of these requirements regarding subcontractors and vendors are unquestioned practices at present for main shaft bearings and should likewise be the case for other components such as transmissions and other vehicle mounted equipment.

The following comments regarding individual paragraphs of the proposed specification should be considered in the context of the foregoing general comment, as an overriding posture from this participant.

Specific Comments - Specification Paragraphs and Sub Paragraphs

Title: Critical Bearing Procurement Scope

1. A bearing may be critical due to becoming in short supply, due to its operating condition being severe, due to consequence of failure, unique features, etc. If critical due to short supply this is a temporal situation which would not relegate the bearing to the category addressed by this specification.

   It appears that the content of the specification and proposed drawing information content is directed at high performance bearings. The title and scope should be redefined accordingly. It would appear that criticality due to short supply is not a part of this effort and is not really addressed herein.

   It is also suggested that at least two categories of bearings be addressed at least on the drawing requirements similar to our GE drawing formats: main engine or accessory drive formats.

2. Applicable Documents

   This list should include and be limited to all the applicable specifications invoked within the body of the specification.

CB Pinco GE

3. Qualification

Agree that sources should be qualified by prime contractor but not TSARCOM.

3.1 Qualification Requirements

Qualification requirements vary from that of individual parts like a bearing to that of the total vehicle which qualifies all components within the vehicle. Recommend that the specification state that the prime contractor shall establish qualification and source approval requirements as required and subject to approval by the cognizant military authority.

4. Inspection

Recommend these requirements as written be replaced by wording with the following intent"

A quality control plan shall be established by the prime contractor subject to approval by the cognizant military authority.

4.1 Inspection Details

Suggest the following: A list of significant processes, dimensions, and other attributes shall be prepared by the vendor and submitted for approval to the prime contractor. The quality plan shall address first article inspection requirements as well as periodic monitoring of all items as listed within the significant processes list, but not be limited thereto.

6. Rejection

Specification to require the prime contractor to adopt standard MRB established procedures.

7. and 7.1 Change Control

Change control procedures are well established for prime contractors under military contract. Recommend that these same procedures be prescribed for prime contractors for vehicles and equipment within the intended use of the proposed specification similar to that for engine contractors.

8. Process and Inspection Approval

Recommend proposed specification require prime contractor to formulate quality control plan which address these items. Said plans by the prime contractor are subject to approval as required by the cognizant military authority.

C B Pines GE

9. Drawing Requirements (Including Sub Paragraphs)

Recommend that the wording of this section allow existing drawing formats and specifications in use by prime contractors be acceptable, provided that they contain the data and intent sought. This should also provide for abreviated formats which apply as defined by the prime contractor to less critical bearings in accessory gearboxes for example. (This practice is in use today at General Electric AEBG.)

Compliance to ANSI Y14.5 or other such standards should be specified if prime contractor does not have established drawing standards which meet the intent of section 9.

Recommend that the format description allow provision to present data via data sheets, drawing details specifications, standards in any combination to allow vendors and prime contractors to use established practices where practical.

9.1.47

Installation data may be obtained from design reports prescribed by prime contractor model specifications. Installation data does not belong on the individual part drawing but rather on the next higher assembly. Submittal of data lists and design reports could be required as part of the contract requirement as stated by the military at the time of contract award.

10. Inspection Processes

Again recommend that this type requirement is required in the prime contractors quality control plan subject to approval by the cognizant military authority.

C B Pines GE

GENERAL ELECTRIC

AIRCRAFT ENGINE GROUP

GENERAL ELECTRIC COMPANY . . . . . 1000 WESTERN AVENUE
LYNN, MASSACHUSETTS 01910, Phone (617) 594-0100

February 22, 1983

Arthur S. Irwin Co. Inc.
Driftwood
Bemus Point, N. Y. 14712

Attention: Arthur S. Irwin

Dear Art,

At the present time, we do not have any carburring grades of steel in our rolling element bearings used in GE engines, Lynn or Evendale.

T64 turboprop engine models utilize AISI 9310 carburized gear shaftings as the inner race of a roller bearing. There are no Army applications of this turboprop engine model.

Regards,

Carroll B Pineo

CARROLL B. PINEO, Principal Engineer
Bearings & Lube Systems Technology
IMZ 240G7, ext 4784

/m

Hughes Helicopters, Inc.
Culver City, California 90230

February 23, 1983

Arthur S. Irwin Co., Inc.
Driftwood
Bemus Point, New York 14712

Dear Art,

In response to your request of February 10, 1983, enclosed are sections of our nose box and main transmission. The basic bearings are M-50 with silver plated steel cages. However, all the roller bearing inner races are eliminated and they operate on carburized or nitrided material. As noted in the attached cross section we do have some unusual combinations of bearing materials.

I hope this answers your request, if not, we would be glad to send further details.

Very truly yours,

H. E. Sawicki

HES/daj

MAIN TRANSMISSION - ACCESS. SECTION

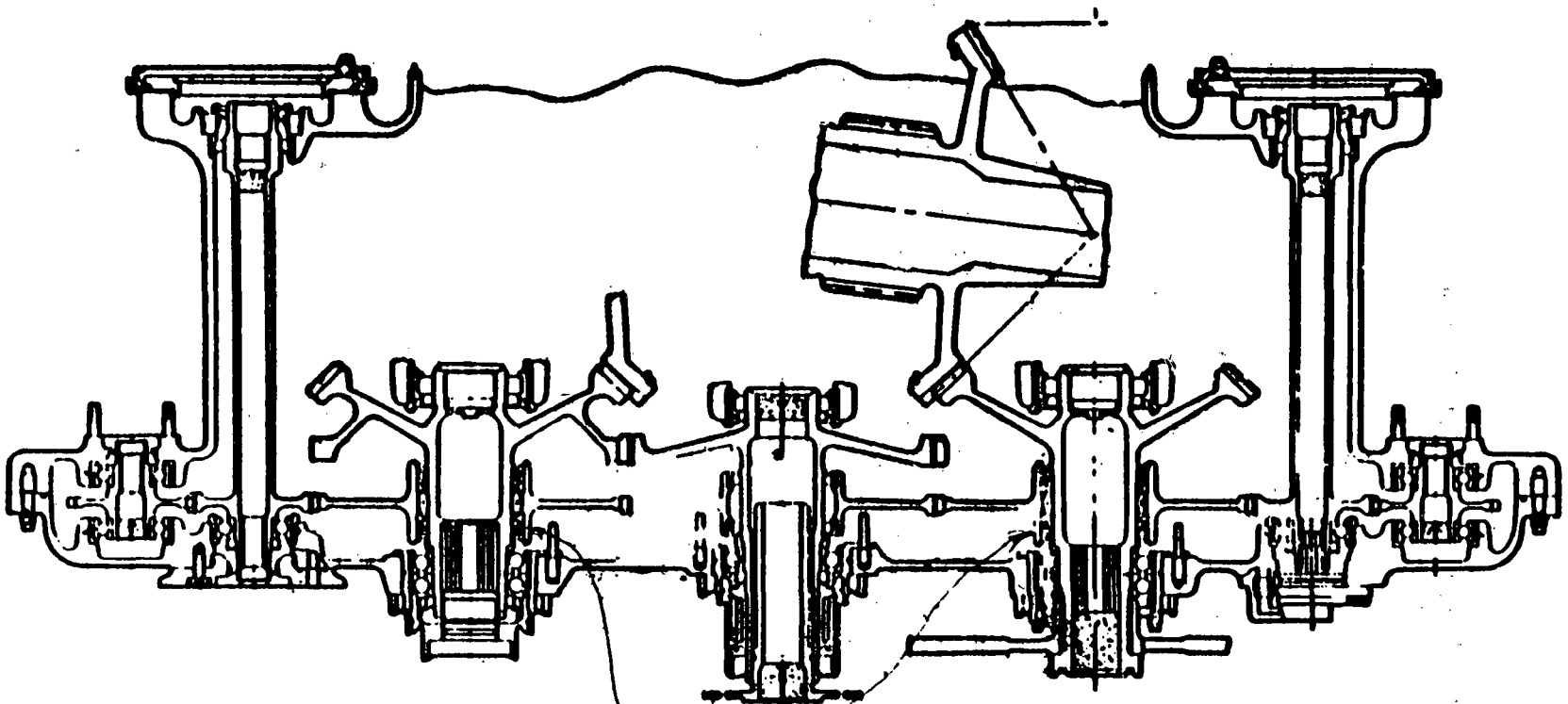

Required Bearing Has
20 Inches, However Rollers Are
Hollow & Made of AMS 6265 (9-310) or
with Outer Race Made of 52100 (AMS 6444)

(CEIM 8620)

14

ORIGINAL PAGE IS
OF POOR QUALITY

DESIGN APPROACH
Drive Subsystem

MAIN TRANSMISSION:

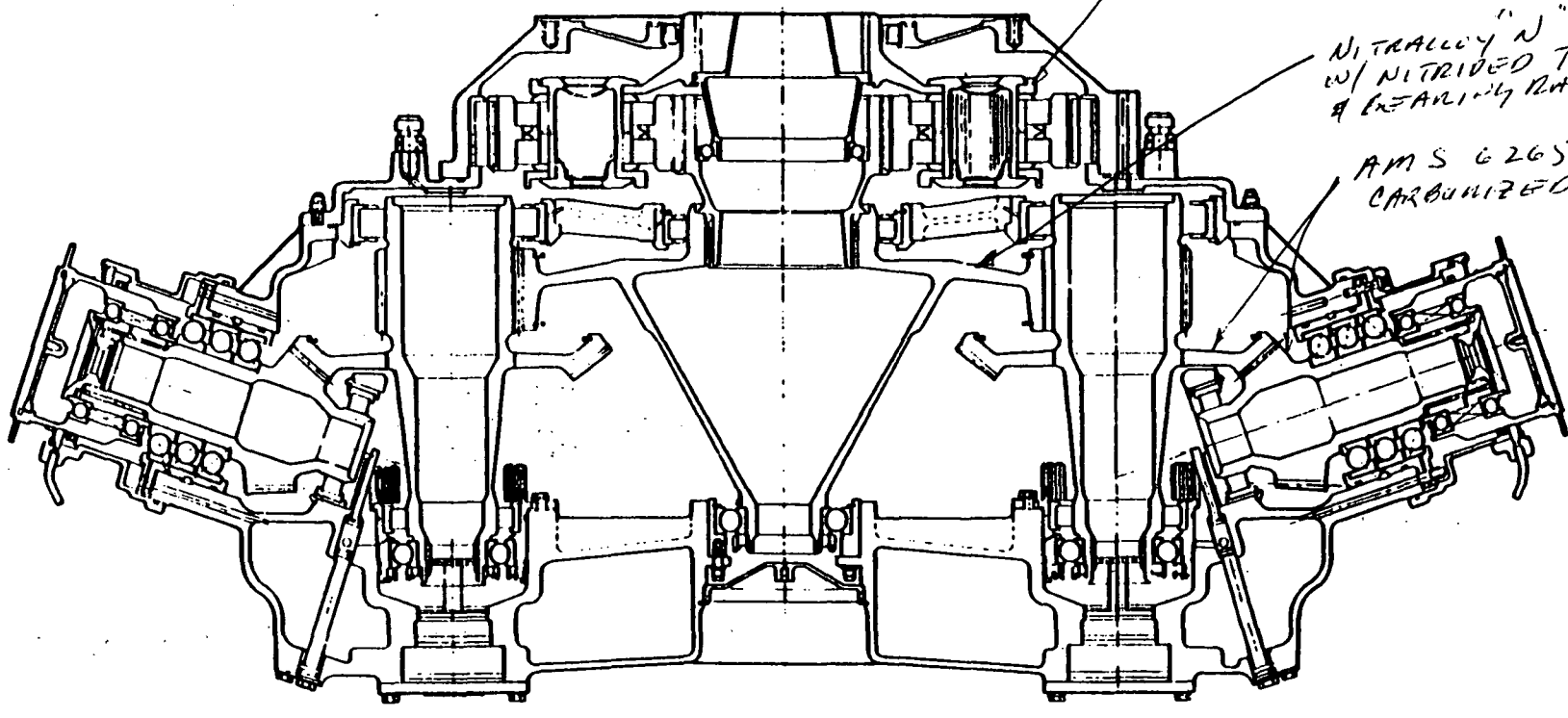

ALL BEARINGS M50 W/ SILVER PLATED
STEEL CAGES EXCEPT AS NOTED

Hughes AAH

DESIGN APPROACH
Drive Subsystem

ENGINE NOSE GEARBOX:

ALL BRGS ARE M-50 W/ SILVER PLATED CAGES
NO INNER RACES ON ALL ROLLER BRGS.
GEAR MATERIAL - AMS 6265 (9310)
CARBURIZED

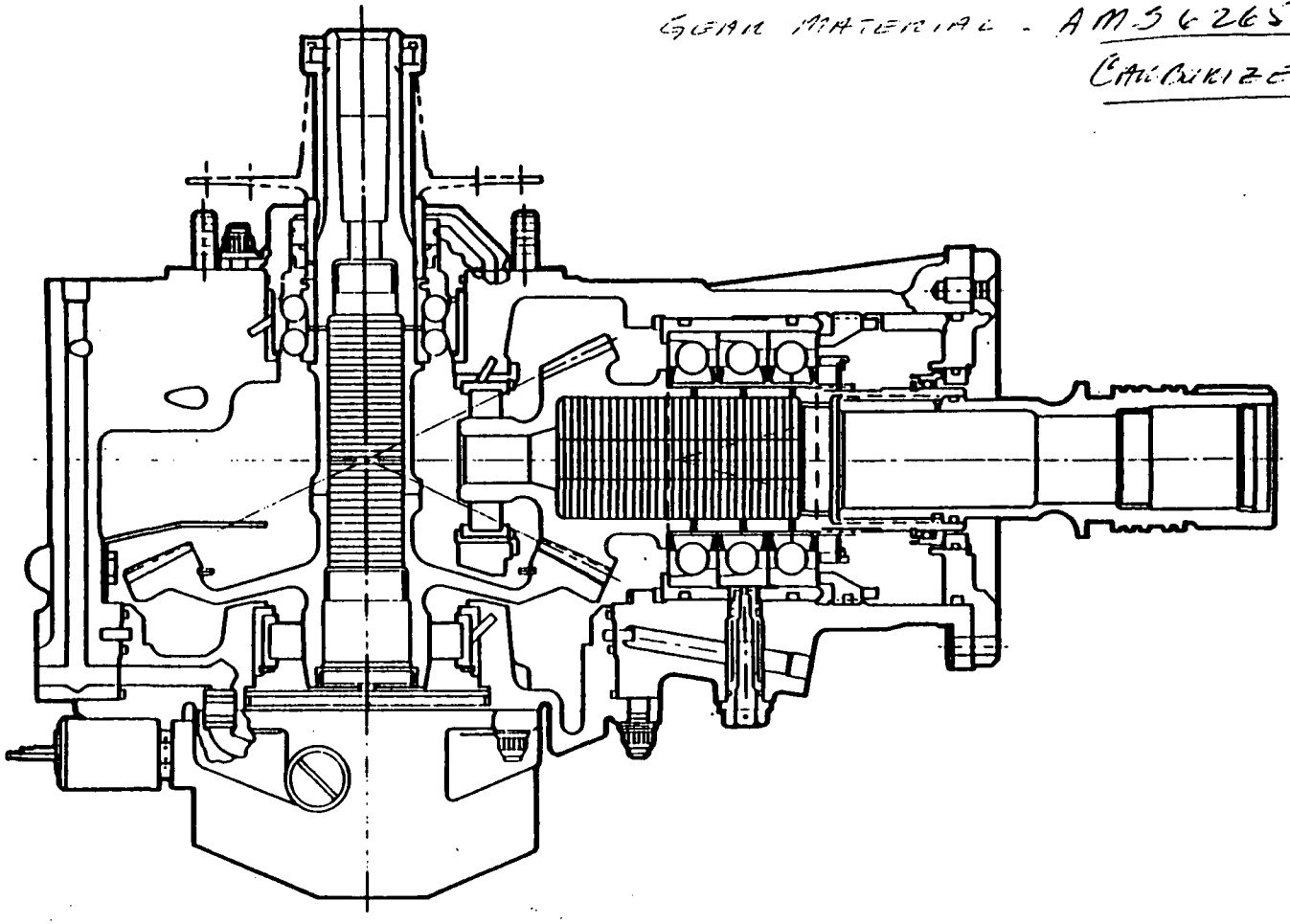

INDUSTRIAL TECTONICS, INC.
18301 SANTA FE AVENUE, RANCHO DOMINGUEZ, CA 90224 • (213) 537-3750
MANUFACTURERS OF PRECISION BALLS AND BEARINGS
bearing division

February 18, 1983

Arthur S. Irvin Co., Inc.
Technology Consultants
Driftwood Center
Bemus Point, NY 14712

Specification for Ball and Cylindrical Roller Bearings
Industry Coordination Meeting on Contract NAS3-23520

Gentlemen:

I wish to congratulate Mr. Art Irvin and Mr. Bill Derner for a well-conducted meeting on January 24 and 25, 1983. The subject at hand and the numerous comments by the participants were certainly interesting. Per your request I summarized some of my thoughts:

Para. 1 - The need for a specification that standardizes contractor drawing requirements and provides for increased technical documentation was orally explained. Somewhere in the document, preferably in the "scope" section, this purpose should be stated. Also, the word "critical" in the title and scope needs to be explained.

In general, if your specification is not to result in vastly increased cost of bearings, it should be held simple and contain only requirements that are truly essential. The draft discussed at the meeting contained too many detailed requirements. It was suggested that technical data can be specified on engineering drawings without imposing pertinent inspections of the hardware. In our experience, the temptation to inspect all drawing features is irresistable. A typical example exists with bearings for Navy nuclear reactors. The incredibly high price of these bearings is a direct consequence of applicable inspection and documentation requirements.

Para. 2 - Of the "Applicable documents - specifications" we find only AMS 6491, ASTM E112 and ANSI Y14.5 in the subsequent text. Your specification must indicate in what way the listed documents are to apply (e.g. the present text in last sentence of para. 4.1 is not acceptable).

To guard against "unqualified" shops manufacturing bearings we suggest you add the requirement for the bearing vendor's QC system to meet MIL-Q-9858. This statement would fit well as a second sentence in your spec paragraph 3.

Para. 3.1 - Suggest you replace these vague and undefined requirements with a more concrete definition: Who has to do what, and when.

Para. 3.2 - We seriously question the technical merit and the cost impact of this requirement.

Para. 4 - One-hundred percent inspection of all drawing features should be limited to small prototype quantities. For production orders industry-accepted sampling plans should automatically be implemented.

Para. 4.1 - Is redundant and should be omitted.

Para. 5 - Change to read: "No production orders of bearings may be procured from other than qualified sources (reference para. 3)."

Para. 6 - Secondary operations to correct reworkable discrepancies and/or replacing rejected components of an assembly are standard practice in all manufacturing plants. We see no reasons to restrict this logical procedure. Rewrite paragraph as follows: "Non-reworkable bearing parts which have been 'rejected' shall be permanently identified and/or removed from the production floor. Salvaging operations may proceed only upon approval by the cognizant military authority."

Para. 7 - The proposed text is totally unworkable. Would result in no bearings getting made. Changes should be classified by levels of importance and only the highest level should be subject to prior approval requirements. Suggest to rewrite as follows: "Upon qualification, bearing vendor shall not implement changes in material, heat treat cycles and inspection levels unless such changes have received prior approval."

Para. 8 - Must be rewritten: "Processing outlines and general inspection plans shall be required of a qualified vendor prior to awarding production contracts."

Para. 8.1 - Suggest a rewrite: "Major deviations from the approved processing outlines and inspection plans shall require prior approval by the original approval authority."

Para. 8.2 - Delete this paragraph in its entirety.

Para. 9 - In the first sentence delete the word "critical" and substitute "pertinent" for the word "essential."

Para. 9.1 - Drawing checklist

Para. 9.1.1 through 9.1.9 . . . OK

Para.'s 9.1.10 and 9.1.11 seem to require a clarification: Does the spec propose to include basic load rating (C_a) for thrust ball and/or thrust roller bearings or is it meant to include load capacities in thrust direction for radial ball and/or radial roller bearings? (Refer to ANSI/AFBMA, Standard 9 - 1978, pg. 4, para. 4.2.1 and ANSI/AFBMA, Standard 11 - 1978, pg. 7, table 3 and pertaining note.)

Para. 9.1.12 through 9.1.14 - OK

Para. 9.1.15 - Omit

Para. 9.1.16 - OK

Para. 9.1.17 - Omit

Para. 9.1.18 through 9.1.20 - OK

Para. 9.1.21 - Add notation "(reference)."

Para. 9.1.22 - Replace with ball/roller drop in retainer pocket in radial direction, retainer centered."

Para. 9.1.23 - OK

Para. 9.1.24 - Omit any reference to plating specification(s).

Para. 9.1.25 and 9.1.26 - Omit

Para. 9.1.27 - "Retainer views and dimensions sufficient to define part outline."

Para. 9.1.28 and 9.1.29 - OK

Para. 9.1.30 - "Surface finish roughness A-A for retainer pockets and piloting surfaces."

Para. 9.1.31 and 9.1.32 - Omit

Para. 9.1.33 - "Special surface treatments or coatings, where applicable."

Para. 9.1.34 and 9.1.35 - Combine: "Bearing ring face flushness and/or cross-corner dimension, where required."

Para. 9.1.36 - Suggest this text should be assigned to paragraphs 9.2 and 9.3 (end play in radial ball bearings and end float for radial roller bearings).

Para. 9.1.37 - As above, to appear in paragraph 9.3.

Para. 9.1.38 through 9.1.41 - Place at differenct location, preferably following 9.1.11. In para. 9.1.41 insert "Minimum" before "stabilization temperature."

Para. 9.1.42 - Rewrite: "Applicable specifications for bearing material procurement, inspection and evaluation requirements."

Para. 9.1.43 and 9.1.44 - Combine, using the following text: "Outer/inner ring configurations, showing details of anti-rotation features or puller grooves, etc."

Para. 9.1.45 - "Identification marking requirements."

Para. 9.1.46 and 9.1.47 - Omit; should not be part of a bearing drawing.

Para. 9.1.48 - "Nital etch removal requirements."

Para. 9.1.49 - Delete, is redundant to 9.1.20.

Para. 9.1.50 - Delete, is redundant to 9.1.41.

Para. 9.1.51 - "Inner/outer ring high point of eccentricity marking, as required."

Para. 9.2 - Add "roller" (two places) between words "cyclindrical" and "bearing(s)."

Para. 9.2.1 and 9.2.2 - OK

Para. 9.2.3 - Add "(nominal or reference)."

Para. 9.2.4 - Change to "minimum roller (cylindrical) flat length."

Para. 9.2.5 - "Roller crown inspection points (gage point and crown drop)."

Para. 9.2.6 through 9.2.9 - OK

Para. 9.2.10 and 9.2.11 - Add "where applicable"

Para. 9.2.12 and 9.2.14 - Combine: "Roller cylindricity (where applicable) and roller complement diameter variation."

Para. 9.2.13 - Delete. Requirement is addressed in proposed text of 9.1.22.

Para. 9.2.X - For purpose of completeness note that roller-to-channel width clearance and channel side wall lay-back angles (or special configuration) have not been mentioned.

Para. 9.3 - "Ball bearing requirements - In addition to general requirements listed in para. 9.1, the following are required for ball bearings."

Para. 9.3.1 through 9.3.4 - These call-outs, combined with 9.1.12 and 9.1.36 are over specified. For this reason, either contact angle (9.3.1) or shim thickness (9.3.4) may be used, but not the combination of both.

Para. 9.3.5 - OK

Para. 9.3.6 - Omit if this text infers race diameters and tolerances.

Para. 9.3.7 - Add "(if applicable)" and list after 9.3.1.

Para. 9.3.8 - Omit

Para. 9.3.9 and 9.3.10 - Combine: "Ball diameter and grade. Special sphericity/or lot diameter variation tolerances, if different from ball grade specifications."

Para. 9.3.11 - Omit

Para. 9.3.12 - OK, except why not combine this paragraph with 9.2.10 and 9.2.11 and list it in para. 9.1?

Para. 9.3.13 - OK

Para. 9.3.14 - Preceed with "minimum."

Para. 9.3.15 - "Preload limits (or nominal value) for bearing stacks, if applicable."

Para. 9.3.16 - Omit (see 9.3.7)

Para. 9.3.17 - Omit (is part of AFBMA standards)

Para. 9.3.18 - Add: "(ref., applicable only for unsymmetrical ring(s))."

Para. 10 - OK

Para. 10.1.1 - Change to: "Hardness, heat treat verification (charts), metallurgical test results."

Para. 10.1.2 through 10.1.12 - OK, except replace "magniflux" with "magnetic particle inspection"; add "eddy current inspection"; omit word "bead"; and in ALL cases, add: "as required."

Para. 10.2 and 10.3 - Delete. As previously suggested, reference should be made to the requirements of MIL-Q-9858.

Para. 11 through 11.10 - Delete in its entirety! There is no justifiable reason why a material specification should be added to or made a part of a specification describing ball and roller bearings. We suggest existing material specifications be used rather than inventing and imposing yet another specification. Restricting all bearings to M-50 does not appear desirable from a technical or economical viewpoint.

Para. 11.11 through 11.11.2.13 - OK

I hope these comments, while not all positive, will be accepted as constructive critique and will assist you in the preparation of your next draft.

Sincerely yours,

Hans R. Signer
Chief Engineer

HRS:lm

INDUSTRIAL TECTONICS, INC.
18301 SANTA FE AVENUE, RANCHO DOMINGUEZ, CA 90224 • (213) 537-3750
MANUFACTURERS OF PRECISION BALLS AND BEARINGS
bearing division

March 9, 1983

Arthur S. Irvin Co., Inc.
Technology Consultants
Driftwood Center
Bemus Point, NY 14712

Specification - Optimized Bearing Utilization
Industry Coordination Meeting on Contract NAS3-23520

Gentlemen:

A preliminary draft of the "Optimized Bearing Utilization" specification was presented at the meeting. Accordingly, my comments are of a conceptual nature only.

As a first action item you may want to meet with Dr. Jim Dill of WPAFB to discuss his effort which, to my knowledge, was sponsored by the joint chiefs of staff. His study defined the various levels of bearing restoration and the associated nomenclature. Your OBU spec then should be structured to clearly define the desired levels of activities.

Even though not stated in the present text, I surmise that it is the purpose of your specification to give instructions to the Government Rework Facilities, i.e., overhaul personnel, on exactly how bearings are to be cleaned, evaluated, "serviced" and eventually returned for use. In any event, the multitude of bearing types encountered should be addressed. For instance, the specification could be organized reflecting a "flow chart" for the distinctly different tasks applicable to ball bearings, roller bearings, separable and non-separable bearings.

Cleaning: Caution must be exercised when ultrasonically cleaning assembled bearings. Depending on the bearing type and the level of contamination, washing with solvents or degreasing may be preferable. High levels of filtration and cleanliness should apply only to "final cleaning," prior to lubrication and reuse. Vibratory cleaning and/or honing of disassembled bearing components may be considered as being viable options.

Preliminary Visual Inspection: Include severe corrosion as being cause for immediate rejection.

NDT Evaluations: Presumably the methods listed are meant to be available options to be selectively used where best applicable. The test methods, limits of acceptance and the disposition of the bearings should be further discussed. The specification should give guidance as to when a bearing can be reused as is, must be scrapped, or if a rework is advisable what level of rework should be applied.

Visual Examination of Retainer Wear Area: How do you propose to measure wear of .00025 inch per surface on retainer pockets and lands? Typically, the plate thickness of retainers is .001 to .002 inch. Stripping and replating is necessary when the base metal is visible due to wear or when the plating is damaged by chipping or blistering. Retainers that are not plated can be used until distress on the functional surfaces is visible.

Determination of the Need for Restoration: We recommend that no race grinding be performed in army overhaul depots. A military specification, MIL-B-58105, is already in existence, describing the process of bearing restoration by grinding. While that specification is quite comprehensive and well conceived, it also requires certain revisions. For instance, we recommend that restoration by grinding be preceeded by an engineering analysis of the bearing geometry. That specification should further be expanded to permit replacement of individual bearing components in addition to rolling elements on bearing designs where this approach may be either technically or economically more desirable than regrinding both inner and outer rings. Standard size rather than oversize rolling elements can then be used as replacement.

Marking of Processed Bearings: We suggest that appropriate marking be applied to the bearings, indicating the overhaul activity performed.

Sincerely yours,

Hans R. Signer
Chief Engineer

HRS:lm

Phone (616) 755-3741 Telex 22-8436
2860 McCracken, P.O. Box 688
Muskegon, Michigan 49443

KAYDON
CORPORATION

February 8, 1983

Mr. Arthur S. Irwin
Arthur S. Irwin Company, Inc.
Driftwood
Bemus Point, NY 14712

Subject: Industry Coordination Meetings on NASA Contract NA53-23520
REVIEW AND CRITICAL ANALYSIS ROLLING ELEMENT BEARINGS FOR
SYSTEM LIFE AND RELIABILITY

Dear Mr. Irwin:

Having attended the first two sessions of subject meetings held at the Cleveland Airport Holiday Inn on January 24 and 25, 1983, I offer the following recommendations in response to your request.

Recognizing that the primary motivation for the specifications for procurement of new bearings and for rework, restoration, and refurbishment of used bearings was the recent short supply of M-50 bearings we would point out that a similar situation existed relative to 52100 and carburized bearings. And because for a variety of reasons designers will continue to specify bearings and bearing/gears of 52100, 9310, 8620 and other steels, we strongly urge that either the specifications be broadened to include them or that companion specifications for these bearings be written.

In either case, we laud those from TSARCOM and NASA/LEWIS who recognize the benefits to be derived from the existence of such specifications and are pleased to participate in their review. Confirming and supplementing the verbal statements made during the sessions just held, we submit the following comments. Hopefully, to keep this brief for your benefit I have omitted the many suggestions on which I did not make the initial statement and which proved to be non-controversial since in those cases either I assume Bill Derner made appropriate notes or others will comment, or both.

A. Procurement Specification

2. Add documents listed in 11.3 and omitted here. Also add specs. for 52100 (AMS 6440 and 44) and carburizing race materials and for steel cages (AMS 6414 and 15), bronze and silicon iron bronze cages and specs. for quality (MIL-Q-9858) and inspection (MIL-I-45208).

3.2 Substitute requalification required only if major change in product or process. Add Q.C. audit required and first article inspection again required if over 1 year since manufacture of previous order.

FOLLOWING ARE OUR REGISTERED TRADEMARKS - YOUR ASSURANCE OF KAYDON QUALITY.
KAYDON Endura-Slim Lami-Seal Endurakote WireX
Reali-Slim Reali-Seal Lami-Shield Thin-Shell Bowser

KAYDON
CORPORATION

4. Amend to provide for "first article inspection" where sampling is permitted.

7. Amend to state the basic purpose. Forbid changes which would have an adverse effect on the end-product; require that all changes be reported to avoid innocently committing the former.

8. Substitute "equipment manufacturer" for "cognizant DCAS inspectors".

8.2 Amend to essentially the same as 7. above, substituting "process deviations" for "changes".

9. Qualify such that listed items must appear on drawings only "if applicable and required to assure proper function of bearing".

9.1 Separate and identify those items that are "for engineering reference only" and such are not subject to the inspection process: 9.1.5, 8, 9, 10, 11, 15, 21, and 47, also 9.3.9.

Omit 9.1.17 and 46, the latter to be included in Purchase Order to properly provide for variety of requirements not related to the bearing or its application(s).

Add surface defects allowed (nicks, dents, scratches, etc.)

Add microstructure requirements statement.

Add limitations on retained austenite.

Add decarburization limits on non-functional surfaces.

Add any NDT requirements.

9.2 Add:

Roller roundness
Limitations on roller drop in cage
Roller/guide flange clearance
Guide flange configuration detail

Omit either 9.2.12 or 14 (duplication)

KAYDON
CORPORATION

9.3 Restate 9.3.11 to "Grain flow orientation, when important to satisfactory bearing performance, shall be as negotiated between equipment manufacturer and bearing supplier.

NOTE - This statement should also be added to 9.2 - or both statements omitted and a single statement added to 9.1.

Redefine 9.3.17 as "maximum out of parallelism of ball groove and face(s)".

10. Substitute "equipment manufacturer" for "cognizant military authority as delegated thru DCAS".

10.1 Add "and Processes" to title.

Substitute "magnetic particle inspection" for "magnaflux".

Add "eddy current inspection".

11. Material - See the second paragraph of our letter.

11.6.4.1.2 Change Severity for Class 3 Radial Segregation to B

Change Severity for Class 4 Ring Pattern to C to agree with AMS 6491.

11.6.5 Change grain size to 7 or finer to agree with AMS 6491.

11.6.6 Change Includion Rating to:

Type	A	B	C	D
Thin	1.5	1.0	1.0	1.5
Heavy	1.0	1.0	1.0	1.0

to agree with AMS 6491.

11.6.6.1 Add appropriate statements for Types A thru D Heavy.

11.11.2 Add "Results of test for response to heat treatment" as Item 14.

B. Utilization Specification

CLEANING: Add precautionary statement; ultrasonic cleaning of assembled bearings can result in serious damage to vital surfaces. Recognize and provide for use of other cleaning methods such as "force flushing".

PRELIMINARY INSPECTION: Provide for tang-type and line indent-type cages.

NDT EVALUATION: Add noise testing if performed on bearings originally; this would have to be done before dismantling, obviously. Change first paragraph after "examination" to "and/or others required to qualify parts for further use". Change "or" to "and" in second paragraph.

DIMENSIONAL VERIFICATION: Regarding grinding, plating, and regrinding to restore I.D.'s and O.D.'s to original dimensions we recommend:

1. Leaving stock removal amount up to contractor, specifying instead that plating after grind be tightly bonded and uninterrupted.
2. Specifying baking after plating to prevent hydrogen embrittlement.
3. Specifying the plating material(s) allowed. We would limit this to hard chrome.
4. Call out the applicable Government Specification(s). We would call out QQ-C-320, Class 1.

STANDARD RACE GRINDING STOCK REMOVALS:

Add honing as a stock removal method.

Change stock removal callout to .003 inch <u>maximum</u> per side. If the intent is to standardize on roller size, state this directly. No one value of stock removal will suit all situations.

Amend second sentence (Care must....) to require same control as for new bearings.

KAYDON
CORPORATION

ASSEMBLY: Amend third sentence to, "all parts will be coated with a auitable material as called out in the procurement document".

MARKING, CODING, AND SEGREGATION FOR PACKAGING:

Regarding marking and coding, this should provide for inclusion of time in service, identification of facility doing the work, and maintenance of traceability. Regarding packaging, as with new bearings this is better provided for in the purchase document.

Art, is there are questions about any of these recommendations of the supporting arguments for them, please give us the opportunity to discuss them further with you or Bill Derner. It has been a pleasure working with you on this project and I look forward to the next meeting on May 17 and 18.

Sincerely,

KAYDON CORPORATION

Richard F. George/ss

Richard F. George
Vice President-Engineering

ss

cc: T.A. Bushar/K.D. Harestad/R.A. Laferriere
M.L. Hoard/P. VanGennep

PRATT & WHITNEY AIRCRAFT GROUP

East Hartford, Connecticut 06108

February 2, 1983

Arthur S. Irwin Co., Inc.
Driftwood
Bemus Point, New York 14712

Attention: Mr. Arthur S. Irwin

Subject: Industry Coordination Meeting - Jan. 24 & 25, 1983
NASA Contract NAS3-23520
Bearing Specification - Comments

Dear Sir,

The subject meeting was interesting and extremely informative. Mr. Bill Derner should be commended on the manner in which he conducted the sessions. I feel that the information exchange should prove to be beneficial to all of the participants. Because of the wide cross-section of representatives (bearing, engine, helicopter manufacturers, NASA, Army etc.) the meeting presented a rare opportunity to discuss the varied aspects of bearing manufacture, procurement and utilization.

Per your request, I have listed a few additional items and/or comments which you may want to consider for inclusion in your proposed specification. The items are summarized in the attachment. I have also included my P&WA expense report and my mail-stop for future correspondence.

Sincerely yours,

PRATT & WHITNEY AIRCRAFT GROUP
Commercial Engineering

W. R. Ironside

W. R. Ironside

mb
enclosures

Attachment

Bearing Specification - NAS3-23520

Comments:

1) Section 3, Qualification

   . The cage vibration modes should be established to determine if there are any driving frequencies (ball passing, gear mesh, etc.) that coincide with the cage natural frequency.

2) Section 8.2 (Process Deviation Approval) and 10.2 (Material Review Board)

   . A reasonable time limit should be established for approval or response.

3) Section 9, Drawing Check List - Add:

   . Roller drop

   . Roller flat centrality/crown drop uniformity

   . Roller end concavity

   . Split inner ring ball bearing - radial mismatch in groove at split faces (control to prevent ball from contacting the split face edge during load reversal).

4) Section 9.1.47, Installation Data

   . Some bearing part numbers are used in several different locations. The applications have a wide range of environments and/or operating conditions (speeds, loads, thermals, lubrication, etc.). It would be difficult to place all of this information on a bearing drawing.

5) Section 10.1, Inspection Methods

   . Add eddy current.

6) Cage Design/Refurbishment - The bearing spec. should state that a "snap-in" type roller retention scheme is preferred over "bent tang" (if assembly permits). This would allow the rollers to be removed for roller path inspection and eliminate the concern about tang re-bending and breakage during refurbishment.

W. R. Ironside - Mail Stop 163-10
Pratt & Whitney Aircraft
400 Main Street
East Hartford, CT. 06108

SPECIFICATIONS

FOR

BALL AND CYLINDRICAL ROLLER BEARINGS

ORIGINAL PAGE IS
OF POOR QUALITY

6. Rejection - All components and assemblies which are rejected shall be ~~permanently~~ identified, ~~and removed from the production facility when the DCAS decision for Rejection.~~ ~~Salvage~~ or rework can only be considered after Quality Matl. Review Board recommendations In process repair are studied and approved by the cognizant military authority.

7. Change Control - There may be no change to the design, material, tolerances, processes, quality control plan, procurement sources, ~~heat treat~~ heat treat or post heat treat, inspection standards, nor shop operations or routings without the ~~express written prior~~ knowledge ~~approval~~ documentation of the original contractor or the cognizant military authority.

7.1 Change Control Approval - Any request for change shall be the responsibility of the vendor to submit prior to the initiation of work on the contract and approvals must be on hand prior to the start of the operation on which the change is to be made.

8. Process and Inspection Approval - ~~Prior to~~ After the award of a production contract, all process operations and all inspection procedures and details will be evaluated and confirmed by the cognizant ~~DCAS~~ govt. inspectors to insure compliance with currently accepted aerospace industry standards. This will include all destructive and non-destructive methods, as well as quality control plans. ~~and sample sizes~~.

8.1. Process and Inspection Changes - As required in paragraph 7, no alteration or change in any operation, process, or inspection procedure may be made without prior review, evaluation, and approval by the original approval authority.

8.2. Process Deviation Approval - Deviations from approved processes or inspection standards require formal Material Review Board action and submission to the cognizant authority prior to commission, omission or deviation. Written approval is required prior to any deviation by the vendor.

9. Drawing Requirements - All drawings pertinent to the procurement and analysis of these critical bearings shall include the essential data and callouts in a format that complies with the following checklist. It shall be the responsibility of the original contractor to update his drawings for use by TSARCOM as directed in his current or follow-on contracts. That information not specifically noted on the checklist but essential for definition and control of significant characteristics will also be provided by the contractor in compliance with the intent of this specification. These drawings will be completed in a manner prescribed by ANSI Y14.5.

9.1. Drawing Checklist

- 9.1.1. Type of bearing
- 9.1.2. Bore
- 9.1.3. O.D.
- 9.1.4. Width
- 9.1.5. AFBMA class
- 9.1.6. Size and Number of rolling elements per row
- 9.1.7. Number of rows of rolling elements
- 9.1.8. Basic dynamic radial load rating per AFBMA
- 9.1.9. Basic static radial load rating per AFBMA

ARTHUR S. IRWIN CO.
Technology Consultants
Driftwood, R. F. D. 1
Semus Point, NY 14712

continued next page .....

R 9.1.10. Basic dynamic thrust rating where applicable
R 9.1.11. Basic static thrust rating per AFBMA where applicable
— 9.1.12. Radial internal clearance (total)
9.1.13. Gage load for determining radial clearance
— 9.1.14. Diametral clearance for retainer-to-piloting ring
R 9.1.15. Diametral clearance for retainer-to-non-piloting ring
9.1.16. Retainer overall width (max.) R: cage piloting surface(s) effective width.
~~9.1.17. Retainer end face parallelism~~
9.1.18. Retainer bore-to-O.D. concentricity
— 9.1.19. Pilot-ring locating-diameter concentricity to pilot diameter
— 9.1.20. Rolling element to retainer pocket clearance Roller drop
R 9.1.21. Rolling element complement pitch diameter
9.1.22. Rolling element pocket clearance from tang or retention device in the operating (mounted) condition
— 9.1.23. Retainer material and hardness
9.1.24. Retainer plating required and thickness (per AMS 2412 & or AMS 2410)
~~9.1.25. Retainer plating corner build-up tolerance~~
~~9.1.26. Retainer land width in contact with the piloting diameter~~
~~9.1.27. Retainer details and dimensions~~
— 9.1.28. Surface finish roughness A-A for rolling contact surfaces
9.1.29. Surface finish roughness A-A for mounting surfaces
— 9.1.30. Surface finish roughness A-A for retainer and retainer piloting surfaces.
9.1.31. Lobing, waviness and chatter tolerances applicable to operating and mounting surfaces. ~~Peak to valley limits to be given for a range of lobes per circumference of from 9 to 99.~~
~~9.1.32. Special surface texture modifications required~~ Roller end clearan
9.1.33. Surface treatments or coatings required Roller guiding flange-laydback angle.
— 9.1.34. Assembly cross corner dimensions required
— 9.1.35. Flushness requirements (where applicable)
9.1.36. End play or end float limits (max.)
— 9.1.37. Gage load for end play check
— 9.1.38. Material for rings and rolling elements
9.1.39. Special heat treat required (where applicable)
— 9.1.40. Hardness range required - all components.
9.1.41. Bearing operating temperature range and the stabilization temperature required to provide against growth of elements or undesirable transformation products
9.1.42. Bearing material procurement, inspection and evaluation requirements to insure cleanliness, grain control, sufficiency of working after the ingot is formed and to provide documentation for traceability. (See 11)
~~9.1.43. Outer ring/inner ring details to prevent creep, circumferential motion or shifting.~~
R 9.1.44. Description of details for special mounting or removing procedures

ARTHUR S. IRWIN CO. INC.
Technology Consultants
Driftwood Center
Bemus Point, NY 14712

continued next page .....

ARTHUR S. IRWIN CO. INC.
Technology Consultants
Driftwood Center
Semus Point, NY 14712

ORIGINAL PAGE IS OF POOR QUALITY

9.1.45. Identification requirements, ~~other than standard military requirements~~

~~9.1.46. Packaging requirements~~

R 9.1.47. Installation data

9.1.47.1. Housing fit, material & wall thickness

9.1.47.2. Shaft fit, material and wall thickness

9.1.48. Requirement for all evidence of nital etch staining to be removed from rolling contact surfaces, if required.

~~9.1.49. Maximum diameter and/or length of rolling elements to be used with production retainers~~

9.1.50. ~~Standard~~ Heat treat ~~procedure or~~ specification required

9.1.51. Inner ring high point to be identified, if required

9.2. Cylindrical Bearing Requirements - In addition to the general requirements listed in paragraph 9.1, the following are required for cylindrical bearings.

9.2.1. Roller diameter and roundness

9.2.2. Roller length

9.2.3. Roller crown radius, or

~~9.2.4. Roller effective length~~

9.2.5 ~~9.2.5.~~ Roller crown drop coordinates Roller flat length and centrality

9.2.6. Roller end squareness

9.2.7. Roller corner radius runout with respect to roller cylindrical section, if required.

9.2.8. Roller corner dimensions Roller to flange clrnce

9.2.9. Roller end face finish A-A Flange lay-back angle

Grain flow 2 pt & 3 pt OR

9.2.10. Cage balance tolerance and balancing speed, if req'd.

~~9.2.11. Cage diameter for locating during balancing~~

9.2.12. Diameter variation within one roller set

9.2.13. Requirement, if any, for roller complement to be retained in the cage when removed from its associated ring

~~9.2.14. Roller complement diameter variation required~~

9.3. Ball Bearing Requirements

9.3.1. Contact angle, unmounted; GAGE load for measuring.

9.3.2. Inner ring groove radius as a percentage of ball diameter

9.3.3. Outer ring groove radius as a percentage of ball diameter

R 9.3.4. Shim thickness to be used when grinding split rings

9.3.5. Runout of split ring contact face with respect to the bore of the split ring, if required

9.3.6. Ring groove diameter and tolerance

~~9.3.7. Gage load for measuring contact angle~~ MAX. STEP AT SL...

R ~~9.3.8. Shim angle~~ Shim angle

R 9.3.9. Ball grade, ref.

9.3.10. Ball sphericity and ball complement diameter variation required

9.3.11. Ring grain orientation to be substantially parallel to groove surfaces, if required, (to be negotiated)

9.3.12. Cage balance required and balancing speed range ~~along~~; ~~with~~ diameter for locating during balancing, if required.

9.3.13. Identification required to insure alignment and load-sharing of matched sets of multi row bearings

continued next page .....

ARTHUR S. IRWIN CO. INC.
Technology Consultants
Driftwood Center
Bemus Point, NY 14712

ORIGINAL PAGE IS
OF POOR QUALITY

R 9.3.14. Race depths as a percentages of ball diameter
9.3.15. Bearing preload, if ~~any~~ applicable.
~~9.3.16. Contact angle verification gage load~~
~~9.3.17. Ball groove wobble permissable~~
~~9.3.18. Standoff of ball groove from locating end face of ring~~

10. Inspection Processes - All inspection methods and processes must be approved and certified by the cognizant military authority as delegated through DCAS.

10.1 Inspection Methods to be certified

10.1.1. Hardness, metallurgical structure, austenite determination and material stabilization verification
10.1.2. Decarburization determination
10.1.3. Grinding burn detection and evaluation
10.1.4. ~~Magnaflux evaluation~~ Magnetic particle inspection
10.1.5. Visual defect examination and evaluation — Eddy current inspection
10.1.6. Ultrasonic inspection for subsurface defects
10.1.7. Fluorescent penetrant inspection for surface defects
10.1.8. Surface texture evaluation and control
10.1.9. Plating process control and verification
10.1.10. Coating process control and verification
10.1.11. Shot ~~bead~~ peening process control and verification
10.1.12. Quality control verification and traceability

10.2. Material Review Board

10.2.1. There shall be provided a formal Material Review Board procedure and activity which shall be verified by the procuring agency representative and it shall be presented to the cognizant military authority for approval in writing.
10.2.2. Material Review Board members shall be certified to the DCAS representative and shall not be replaced without acknowledgement by the cognizant military authority.
10.2.3. The Material Review Board shall be the only representative of the contractor authorized to communicate with the DCAS representative and request deviations.

10.3. Inspection Standards

10.3.1. Standards of acceptance for all inspection processes to include dimensional masters shall be traceable to the National Bureau of Standards or shall be proved equal in control and verification to industry standards.

continued next page .....

Data is required to permit review of bearing design and analysis of performance. Such may be presented in Appendices, (separate sheets), or on the face of bearing drawings, clearly designated as not regularly requiring inspection to the level applied to production bearings:

9. Drawing Requirements - The desired characteristics of high technology bearings are defined by engineering drawings and specifications called out on such drawings. It is of advantage to TSARCOM that these drawings be prepared to a standard format in the manner prescribed by ANSI Y 14.5. However, existing drawings will serve the desired purpose, if they are complete and include the following:

ARTHUR S. IRWIN CO. INC.
Technology Consultants
Driftwood Center
Bemus Point, NY 14712

11. Material - Rings and Rolling Elements
Type: AISI M-50 HIGH SPEED STEEL, VACUUM INDUCTION MELTED AND VACUUM ARC REMELTED MATERIAL FOR BALL AND CYLINDRICAL ROLLER BEARINGS

11.1. SCOPE:

11. .1 This specification covers High Speed Forgings, forging stock, mechanical tubing bars, rods, and coils to be used in the manufacture of high quality ball and roller bearings.

11.2. PROCESS:

11.2.1 The steel/electrode shall be produced employing vacuum induction melting process during initial melting, followed by remelting employing vacuum arc remelting (consumable electrode) process. The initial electrode shall be both melted and cast under vacuum.

11.2.2 For manufacture of bearings in this category, the bearing supplier shall purchase, control and test raw material to this specification and certify conformance thereof.

11.3. REFERENCED SPECIFICATIONS:

The following documents are integral parts of this specification. (Use latest issue of each.)

11.3.1 Aerospace Material Specifications:

AMS 2808	Identification, forgings
AMS 2259	Chemical check analysis limits
AMS 2300	Premium Aircraft-Quality Steel Cleanliness Magnetic Particle Inspection Procedure
AMS 2251	Tolerances, low alloy steel bars
AMS 2253	Tolerances, carbon and alloy steel tubing
AMS 2310	Qualification sampling of steels, transverse tensile properties
AMS 2350	Standards and test methods
AMS 6491	VIM-VAR AISI M-50 steel
AMS 2375	Control of forgings - First article inspection

11.3.2 American Society for Testing and Materials:

ASTM E112	Estimating the average grain size of metals
ASTM E350	Chemical analysis of carbon steel, low alloy steel, silicon electrical steel, ingot iron and wrought iron

ORIGINAL PAGE IS
OF POOR QUALITY

ASTM ~~E604~~ 8604 Macro etch testing of consumable electrode vacuum arc remelted steel bars and billets

11.4. CHEMICAL COMPOSITION:

11.4.1 The steel shall conform to the following requirements as to **Chemical Composition:** established in applicable AMS stds

Element			
Carbon	0.80 - 0.85	Chromium	4.00 - 4.25
Manganese	0.15 - 0.35	Molybdenum	4.00 - 4.50
Phosphorus	0.015 Max.	Vanadium	0.90 - 1.10
Sulfur	0.008 Max.	Nickel	0.15 Max.
Copper	0.10 Max.	Cobalt	0.25 Max.
Silicon	0.25 Max.	Tungsten	0.25 Max.

11.4.2 A chemical analysis shall be obtained and reported for the master heat for all elements listed in Para. 4.1. In addition to the heat analysis, each remelt V.A.R. ingot shall be analyzed for carbon and manganese.

11.4.3 Check analysis may be made by the purchaser in accordance with the latest revision of ASTM 59 and AMS 2259 with the exception that check limits for carbon shall be -0.01 under min. in lieu of ±0.03 per AMS 2259.

11.5. FORM AND CONDITION:

The material shall be supplied in annealed and centerless ground or turned with a surface finish of 125 RMS or better as necessary to perform immersion ultrasonic test requirements per Para. 6.7. Bars or forging rounds shall have a max. hardness of BHN 229.

11.6. QUALITY TESTS:

11.6.1 Material shall be uniform in quality and condition, clean, sound and free from foreign materials and from surface and internal defects detrimental to fabrication or to performance of parts. The material shall have substantially uniform macrostructure and grain flow.

11.6.2 The manufacturer shall be held responsible for the quality of the material being furnished and shall make the necessary tests to insure this quality.

ARTHUR S. IRWIN CO. INC.
Technology Consultants
Driftwood Center
Bemus Point, NY 14712

11.6.3 Magnetic Particle Stepdown Test:

11.6.3.1 Specimens shall be taken from 4 inch square billets representing the ~~top and bottom of each~~ ingot. No (RFS)
~~first, middle and last~~

11.6.3.2 Specimens shall be inspected in accordance with AMS 2300.

11.6.4 Macroetch:

11.6.4.1 Billet Inspection: Transverse disc sections shall be cut from both ends of all billets or bars prior to rolling into bars or extrusion into tubes. The samples shall be etched in accordance with ASTM A604 in hot hydorchloric acid and water (1:1) at 160-180°F for sufficient time to develop a well-defined macrostructure.

11.6.4.1.1 Samples shall show freedom from pipe, porosity, inclusions, segregates or segregation.

11.6.4.1.2 Samples shall exhibit macrostructure equal or better than the following macrophotographs of ASTM A604:

Class	Condition	Severity
1	Freckles	A
2	White Spots	A
3	Radial segregation	A
4	Ring pattern	A

11.6.4.2 Finish Product Inspection:

11.6.4.2.1 Transverse disc sections shall be removed from both ends of all bars and tubes and etched in accordance with ASTM A604 in hot hydrochloric acid and water (1:1) at 160-180°F for sufficient time to develop a well-defined macrostructure.

11.6.4.2.2 Samples shall show freedom from pipe, porosity, inclusions, decarburization, seams, internal or external defects.

11.6.4.2.3 If samples are representative of material prior to centerless grind/turn operation, any surface defects, seams or decarburization must be within the stock removal zone.

PRATT & WHITNEY AIRCRAFT GROUP

GOVERNMENT PRODUCTS DIVISION
Mr. W. E. Poole
M/S B-162
P. O. Box 2691
West Palm Beach, Florida 33402

14 February 1983

Mr. Arthur S. Irwin
Arthur S. Irwin Co., Inc.
Driftwood
Bemus Point, New York 14712

Dear Art:

It was a pleasure to see you again. As you requested at the Cleveland meeting, I am sending you my comments on the bearing specification proposed by ASICO for TSARCOM. My comments are fairly general in nature and are intended to show areas we feel are unnecessary or are restrictive to the point of serious cost or delivery impact. My comments are referenced to the paragraph numbers in the proposed specification.

PARAGRAPH NUMBER

3.	Remove the phrase "statistically significant"; any quantity can be statistically significant but confidence may be low. Where feasible, qualification should be in the actual application. I suggest something like: "Quantity required for qualification and the qualification test to be jointly agreed upon by the prime contractor and Government."
4.	As now written, this can be extremely restrictive. I suggest you delete the first sentence.
5.	Delete, this is redundant with Paragraph 3.
6.	Don't permanently mark rejects until scrap decision is made. In this, and most other cases, the prime contractor should be the reviewing authority because of his access to the design details and background. Of course, this is subject to approval by the procuring agency.
7 & 8.	These overlap and should be combined, or clearly separated into design and process changes. Also, as currently written the supplier has no flexibility even with details such as grinding wheel speed, feed rates, etc. These paragraphs have the potential of being very restrictive; are you sure you need, want or can afford this control ?

UNITED TECHNOLOGIES

PARAGRAPH NUMBER (Continued)

9. This enormous list of drawing requirements must be handled with care. This list combined with the 100% inspection requirements of Paragraph 4 could be a "show stopper".

10. It would be better to place responsibility for inspection method approval with the prime contractor. In most cases the mechanisms are already in place. The MRB responsibilities need to be split between the supplier (responsible for undimensioned characteristics) and the prime contractor (responsible for print and specification compliance).

11. Alternate materials need to be allowed; 52100, 440C and carburizing grades are fully acceptable when properly applied. Should this bearing spec. include all the materials requirements ? Perhaps separate material specifications which are referenced in this spec. Also, do you really feel that this premium quality material is required across the board ? I suspect that AMS spec. materials are adequate for many applications.

I don't have specific comments for the refurbishment spec. Since there is an active effort by the Tri Services Committee, chaired by Jim Dill, to do the same job I feel one spec. is enough. In any event, your efforts should be compatible with the Tri Services project.

I hope this helps your task. I'm looking forward to seeing you again at the next review meeting.

Sincerely,

UNITED TECHNOLOGIES CORPORATION
PRATT & WHITNEY AIRCRAFT GROUP
Government Products Division

cc: E. M. Beverly
R. L. Thomas

Bill

William E. Poole

WEP/gjt

ORIGINAL PAGE IS OF POOR QUALITY

Bill Poole

APPENDIX A - GLOSSARY

AA - Finish: Arithmetic Average - a numerical value of surface finish obtained by measuring the vertical distance from the mean line of an irregular surface to the profile in the same manner as with RMS, adding these measurements and dividing by the number of measurements.

ABEC 1, ~~ABEC 3,~~ ABEC 5, ABEC 7, ABEC 9: Annular Bearing Engineers Committee (AFBMA) designations indicating degrees of ball bearing precision.

~~Absolute Filters: Filters capable of filtering out given size particles with near 100% efficiency.~~

Active Surfaces: The contact areas on the rings and rolling elements that are generated as the bearing is rotated.

AFBMA: Anti-Friction Bearing Manufacturers Association

Angular-Contact Bearing: A type of ball bearing whose internal clearances and ball raceway locations are such as to result in a definite contact angle and predetermined relationship of inner to outer ring faces when axially load

ANSI: Americal National Standards Institute

Antifriction Bearing: A bearing using rolling elements such as balls, rollers or needles.

AQL: Acceptable Quality Level is a value specified for a type or group of defects characteristics of an item or product. The specified AQL value (example - AQL of 0.4) is referred to in the appropriate sampling plan table of MIL STD 105. The number of defects for each AQL is then obtained that will determine whether to accept or reject the lot.

Axial Clearance: see End Play

Axial Load (Thrust): Pressure applied to the bearing parallel to the bearing axis.

Back-to-Back Assembly: A duplex pair of matched ball bearings with outer ring backs adjacent.

Ball Complement: Size and number of balls used in a ball bearing.

Bearing Axis: The imaginary center line about which the outer or inner ring will turn.

Bearing Stack: Matched multiple assembly of two or more bearings.

ARTHUR S. IRWIN CO. INC.
Technology Consultants
Driftwood Center
Bemus Point, NY 14712

continued next page .....

Bore Diameter: Inside diameter of inner ring.

~~Bore, Inner Ring: Surface area of bore diameter.~~

Bore, Outer Ring: Inner diameter surface or land area.

Boundary Dimensions: Dimensions for bore, outside diameter, width and corner(s).

~~Burnish: A luster or polish on a surface by friction or rubbing contact.~~

Cage (retainer, separator): A device, partially surrounding the rolling elements and traveling with them, with themain purpose of spacing the rolling elements in proper relationship to each other.

Centrifugal: Moving or acting in a direction away from a center or axis.

Clearance, Axial: see End Play

Clearance, Radial: Radial internal clearance is the total diametrical movement of the unclamped ring when the specified load is reversed.

Cone: The inner ring of a tapered roller bearing.

Contact Angle: Angle between plane perpendicular to bearing axis and line drawn between centers of contact of balls to inner and outer ring raceways.

Convex: A surface that is curved or bulged outward in the center.

Corrosion: A process which destroys the metal by chemical or electrochemical action and converts it to an oxide, hydroxide, or sulfate compound.

Crack: A break, fracture, fissure, crevice or separation in the structure of the part.

Critical Defect: A defect that judgment and experience indicate is likely to result in hazardous or unsafe conditions for individuals using, maintaining, or depending upon the product; or a defect that judgment and experience indicate is likely to prevent performance of the tactical function of a major end item such as an aircraft, missile or space vehicle.

Crowned Roller: Having a very large radius profile on both sides of a straight cylindrical center section to provide a modified line contact with the raceways.

Defect: (discrepancy) Any deviation of a part from specified requirements.

ARTHUR S. IRWIN CO. INC.
Technology Consultants
Driftwood Center
nus Point, NY 14712

continued next page .....

Diametral Clearance: see Clearance, Radial

Dimensional Stability: The degree of stability that hardened steel may have to resist growth or permanent expansion (a function of the amount of retained austenite.)

Duplex Bearing: Matched set of two preloaded bearings.

Dynamic Balance: That condition in a rotating body where the mass axis are coincident or the same.

Eccentricity (radial runout): Occurs when the center of one circular surface is not coincident (the same) as the center of another surface. Ex: Nonuniform thickness between the bore and the ball groove of an inner ring.

End Play (Test): The bearing is to be lubricated with light oil and one of its rings clamped to prevent axial movement, the specified reversing measuring load is applied to the unclamped ring so that resultant movement of that ring is parallel to the bearing axis, the end play is the total movement of the unclamped ring when the load is applied first in one direction and then the other.

Flaking: A condition of advanced fatigue where small pieces of metal are loosened from the base material.

Fluting: A form of pitting in which pits occur in a regular pattern so as to form transverse grooves or flutes in the raceway.

Fretting (fret wear, fretting corrosion, false brinelling): The rapid abrasion that occurs at the interface between contacting, highly loaded metal surfaces when subjected to vibratory motions or low amplitude. Usually accompanied by the formation of oxides of the abraded metal.

Galling: The transfer of material from one surface to another during sliding contact.

Groove Runout with Reference Side, Inner ring: see Raceway Runout with Reference Side, Inner Ring

Groove Runout with Reference Side, Outer Ring: see Raceway Runout with Reference Side, Outer Ring

Hardness: Resistance of metal to plastically deform, determined by indentation.

Height of Raceway Shoulder: Vertical distance from bottom of raceway

ARTHUR S. IRWIN CO. INC.
Technology Consultants
Driftwood Center
Bemus Point, NY 14712

continued next page .....

to inner ring outer diameter or outer ring diameter (same as race depth).

Inclusion: A void, discontinuity, or solid foreign particle in the molecular structure of metal.

Inner Race: Raceway of inner ring

Inner Ring: The inner component of a bearing.

Inside Diameter: Dimension across center of ring bore. May be used to express dimension across bore of snap ring, shield, seal, etc.

Inspection: The process of measuring, examining, testing, or otherwise comparing the unit or product (bearing) with the requirement.

Inspection, Quality Conformance (CQI): All examinations and tests performed for the purpose of determining conformance with specified requirements.

Inspection, 100%: An inspection in which Specified characteristics of each bearing are examined or tested to determine conformance with requirements.

Internal Clearance: see Clearance, Radial

Lands: The flat surfaces on both sides of the raceway or rings.

Land Riding Retainer: A retainer guided by either the inner ring or outer ring.

Laps: Discontinuities or irregularities in the material as a result of working.

Lay: Direction of the predominant surface pattern.

Loading Groove (filling slot): Notch in raceway to permit assembly of a maximum number of rolling elements.

Loading Groove Bearing: A bearing of maximum capacity type, in which there is introduced, by means of a filling slot or loading groove, more balls or rollers that can be incorporated in a non-filling slot or Conrad-type bearing.

Lot: This term shall mean "Inspection Lot", a collection of bearings or kits from which a sample is to be drawn and inspected to determine conformance with the acceptability criteria.

Lot Size: The lot size is the number of bearings in a lot.

Major Defect: A defect other than critical, that is likely to result in failure, or to materially reduce the usability of the product for its in-

tended purpose.

Martensite: A phase of steel with a body-centered crystalline structure characterized by a needle like microstructure.

Matching: Inner and outer rings in duplex sets that are matched for bore, O.D., and eccentricity, within specified tolerances..

Micron: One millionth of a meter, 1 micron equals .00003937 inches.

Minor Defect: A defect that is not likely to materially reduce the usability of the bearing for its intended purpose, or is a departure from established standards having minimal bearing on the effective use or operation of the unit.

Nominal: Approximate or rated value.

Outside Diameter Squareness with Side (Test): One side of the outer ring is supported on a flat plate of suitable dimensions (with inner ring free) and held against a stop located close to the lower corner of the outside diameter. The indicator is applied directly above the stop close to the upper corner of the outside diameter. The deviation from the outside diameter squareness with side is the difference between the minimum and maximum reading of the indicator when rotating the outer ring one revolution.

Parallelism of Sides: The difference between the largest and smallest width of the bearing rings.

~~Particulate: Existing in the form of very small separate particles.~~

~~Periphery: The external boundary or surface of a body.~~

Pitch Diameter, Rolling Elements: The diameter of the center line of the rolling elements.

Pitting: Minute removal of raceway of ball surfaces through fatigue, corrosion or electrical arcing.

Plastic Flow: Deformation that permanently remains after removing the load which caused it.

Pocket, Cage: That portion of cage which is shaped to receive the rolling element.

Precision: The degree of agreement of repeated measurements of a quantity. Compare with accuracy.

ARTHUR S. IRWIN CO. INC.
Technology Consultants
Driftwood Center
Bemus Point, NY 14712

continued next page .....

Preload: Thrust loading a bearing in a unit to increase rigidity. Preloading decreases deformation and deflection by absorbing the initial portion of the deflection curve which is steep and increasing at a high rate. The result is that the deflection is more uniform and has less magnitude throughout the loading range.

Processed Bearing: A bearing that has been used and then cleaned, inspected, gaged, tested and preserved for additional use.

Profile: The contour (external outline) of a surface in a plane perpendicular (right angle) to the surface.

Profile (measured): A representation of the profile abtained by instrumental means.

QCL: Quality Characteristics List

Race: see Ring

Raceway: The contact path of the rolling element on rings of rolling bearing.

Raceway Diameter: Diameter of the inner or outer ring raceway of a bearing.

Raceway, Inner Ring: Track or groove for rolling elements in the inner ring.

Raceway, Outer Ring: Track or groove for rolling elements in the outer ring.

Raceway Runout with Reference Side, Inner Ring (Test): Mount bearing on arbor having a very slight taper (preferably 0.0001 to 0.0002 in. on the diameter per inch of length). Support outer ring in horizontal position and apply indicator to side of inner ring. The deviation from groove parallelism with side is the difference between the maximum and minimum reading when rotating the arbor one revolution.

Raceway Runout with Reference Side, Outer Ring (Test): Mount bearing on arbor having a very slight taper (preferably 0.0001 to 0.0002 in. on the diameter per inch of length). Apply a true running weight to the outer ring. Support arbor in a vertical position and apply indicator to side of outer ring. The deviation from groove parallelism with side is the difference between the maximum and minimum reading when rotating outer ring one revolution.

Radial Clearance: see Clearance, Radial

ARTHUR S. IRWIN CO. INC.
Technology Consultants
Driftwood Center
Bemus Point, NY 14712

continued next page .....

Radial Load: Pressure applied to the inner or outer rings perpendicular to the bearing axis.

Radial Runout (Test): Mount bearing on arbor having a very slight taper (0.0001 to 0.0002 in. on diameter per inch of length). Apply indicator on center of stationary outer ring. The radial runout is the difference between the minimum and maximum reading when rotating the arbor one revolution. Corrections should be made for the inaccuracy of the arbor.

Radial Type Bearing: A rolling bearing primarily designed to support a radial load perpendicular to shaft axis.

Random Sampling: Plan for choosing sample units in a random or nonregular pattern for quality inspection.

Rating Life (L_{10}): Number of hours at a given speed that 90% of a group of identical bearings will atain or exceed before the first indication of fatigue cracking or spalling.

RBEC 1, RBEC 5: Designations indicating degrees of roller bearing precision. Roller Bearing Engineers Committee (AFBMA)

Refinish: To restore an existing surface finish without removing all the existing finish.

Refurbish: To repair bearings by replacement or worn and/or defective parts and resurfacing any surface including raceways.

Restoration: To return a bearing to original assembly print dimensions by regrinding raceways and rebuilding with oversize rolling elements.

Retained Austenite: Unconverted austenite phase remaining in steel after heat treating to obtain the harder, more fatigue resistant martensitic steel.

Retainer: see Cage

Rework: The overall procedure for cleaning, reworking, refurbishing, restoring and reissuing of used or rejected bearings.

RFI: Ready for issue.

Rockwell Hardness Test: A test for determining the hardness of a material based on the depth of penetration of a specified penetrator into the specimen under specified load conditions.

Roller: Load-carrying rolling element. May be cylindrical, tapered or barrel shaped.

ARTHUR S. IRWIN CO. INC.
Technology Consultants
Driftwood Center
Bemus Point, NY 14712

continued next page .....

ORIGINAL PAGE IS
OF POOR QUALITY

Roller Assembly: Rollers and cage.

Roller Complement: Size and number of rollers in a bearing.

Roller Diameter: Maximum circular dimensions of straight rollers.

Roller Length: Distance between the ends or faces of the roller.

Rolling Bearing: A bearing using rolling elements such as balls, rollers, or needles to reduce friction and to support load.

Runout: The amount that one surface lacks of being true with another surface of the same part.

Runout, Radial: see Radial Runout

Sample: A sample consists of one or more parts drawn from a lot, the parts being selected at random without regard to their quality.

Sampling Plan: A sampling plan indicates the number of bearings from each lot which are to be inspected and the criteria for determining the acceptability of the lot.

Scratches: Linear abrasions on the surface.

Scuffs: A series of small superficial or shallow scratches.

Separable: A bearing assembly that may be separated completely or partially into its component parts.

Separator: see Cage.

Side Runout, Inner Ring (Test): Mount bearing on arbor having a very slight taper (0.0001 to 0.0002 in. on diameter per inch of length). Apply indicator against side of inner ring. The side runout is the difference between the maximum and minimum reading when rotating the arbor one revolution.

Skew: Slant, twist, nonsymetrical, nonuniform distribution.

Smearing or Pickup: Removal of raceway or ball material die to skidding contact and its redisposition at another point in the form of smear.

Spalling: Actual removal of material from raceway or rolling element surfaces in the form of flakes, resulting in cavities - fatigue related.

Split Ball Bearing: A ball bearing having either one or both rings split across the raceway so as to facilitate assembly.

ARTHUR S. IRWIN CO. INC.
Technology Consultants
Driftwood Center
Bemus Point, NY 14712

continued next page .....

Squareness of O.D./Bore with Face: The squareness (90° angle) of the face with the outside diameter/bore of a ring.

Staking: A method of retaining a bearing by displacing housing material over the chamfer.

Stains: Surface discoloration.

Standard: A physical or numerical limit which is used as a reference. (Plug gage = physical and a surface roughness limit = numerical).

Statistical: Of, relating to, or dealing with the collection and analytical interpretation of numerical data.

Superficial: Effecting only the surface of an object.

Surface Texture: Repetitive or random deviations from the nominal surface which form the pattern of the surface. Includes roughness, waviness, lay and flaws.

Tandem Duplex Mounting: Assembly of two or more ball bearings mounted so as to ~~divide~~ share the thrust load.

Tarnish: A stain on the surface.

Temper: To soften hardened steel by reheating at a temperature below the hardening temperature.

Thrust Bearing: A ball or roller bearing with space between rings oriented perpendicular to the axis of rotation. It is primarily intended to carry thrust loads.

Used Bearing: A bearing that has seen service and has been subjected to operating loads.

Width: The distance from one face of inner ring to opposite face of outer ring.

Width, Inner Ring: Dimension across the inner ring.

Width, Outer Ring: Dimension across the outer ring.

ARTHUR S. IRWIN CO. INC.
Technology Consultants
Driftwood Center
Bemus Point, NY 14712

From: Bill Poole

To: Art Irwin Date: 2/14

I just got your note asking for our usage of carburizing bearing alloys. P&W isn't currently using any carburizing grades, we have in the past used Bower 315 which is now obsolete.

Bill

PRATT & WHITNEY AIRCRAFT GROUP
Government Products Division

UNITED TECHNOLOGIES.

PWA 11138

ROLLWAY

Rollway Bearing Division 315·457-6211
P.O. Box 4827 Telex: 93-7265
Syracuse, New York 13221

March 16, 1983

Arthur S. Irwin Co., Inc.
Driftwood
Bemus Point, N.Y. 14712

Dear Art,

After many interruptions am finally commenting on the specification for ball and cylindrical roller bearings reviewed at the Industry Coordination Meeting January 24-25 1983.

Although Martin Joseph and you kept telling us that the word "critical" meant "supply critical" not "application critical", we just couldn't seem to be able to keep this in focus. Our reasoning is that today supply critical means any bearing component fabricated from CEVM 8620 material and tomorrow may mean something else, depending on work stoppages, shortages of critical alloying elements, or whatever.

There seems to be no challenge from the propulsion and power train representatiges, or from the bearing manufacturer representatives, that a specification is required for high performance bearings that protects the original contractor and TSARCOM against the procurement by governmental agencies of substitute bearings from an unsubstantiated source during periods of bearings being critical in supply.

There also seemed to be a concensus that not all bearings in propulsion and power train systems were required to be classified as high performance and that the original contractor should so denote which bearing positions are to be classified as high performance. With this in mind, it would require that the specification be expanded to cover more materials than VIM-VAR M50.

Regarding inspection, we feel that 100% inspection of all drawings listed and other noted characteristics is too broad a brush and should be negotiated with the original contractor or TSARCOM before placement and acceptance of an order.

DIVISION OF LIPE-ROLLWAY CORPORATION

ROLLWAY

We are sure that your tapes of the proceedings will yield adequate comments on the paragraph by paragraph review.

Regards,

T. L. Morrissey
Manager
Quality & Engineering

TLM/rvg

UNITED TECHNOLOGIES SIKORSKY AIRCRAFT

North Main Street
Stratford, Connecticut 06601
(203) 386-4000

February 21, 1983 SEL-7715

Arthur S. Irwin Company, Inc.
Driftwood
Bemus Point, New York 14712

Attention: Mr. Arthur S. Irwin, President

Enclosure (1) Comments on Specifications for Ball and Cylindrical Roller Bearings
Enclosure (2) Comments on Specification - Optimized Bearing Utilization

Subject: ASICO Meeting on Bearing Specifications

At the subject meeting in Cleveland, Ohio on January 24 and 25, it was requested that comments and opinions stated during the meeting be summarized.

Accordingly, Enclosures (1) and (2) are submitted for your review. In addition, the following highlights are my main areas of concern.

1. The specification requires the use of materials (particularly M-50) and design detail usually associated with the design of high speed engine bearings.

   In many cases, bearings designed for helicopter transmissions do not need these design features and alternate ring materials, such as case-hardened steels, are required to achieve satisfactory performance.

2. Traditionally, all the design features contained on source control drawings require source or destination inspection by Quality Assurance. The addition of data required for detailed engineering analysis of bearing performance characteristics will require modification of the source control format to allow the inclusion of this data for Engineering use only.

3. The refurbishment or restoration of used aircraft bearings must be carefully controlled and the performance of these bearings in service must be closely monitered.

It is essential that any bearing that is reworked in this manner be reidentified so that the rework that was accomplished is completely traceable. Also, the identification of the facility performing the rework must be permanently marked on the bearing so that any impact on component warrantees or product integrity may be properly assessed.

I am hopeful that these problems can be resolved and am looking forward to our next meeting scheduled for May.

Sincerely yours,

UNITED TECHNOLOGIES

Carl H. Keller Jr.

Carl H. Keller, Jr.
Supervisor-Tribology
Transmission Systems
Design and Development

CHK:ld

P.S. In response to your recent letter dated 2/10/83, the following carburizing steel grades and specifications are used in helicopter drive systems:

Steel	Specification
9310	AMS6265
8620	AMS6276
CBS600	Timken

ENCLOSURE (1) COMMENTS ON SPECIFICATIONS FOR BALL AND CYLINDRICAL ROLLER BEARINGS.

Paragraph

1. The type of bearings should be defined, i.e., ball, cylindrical roller bearings included; tapered roller bearings not included. The useage for the bearings should also be defined, i.e., main shaft, main and tail drive bearings are included; accessory bearings, free wheel unit bearings and drive shaft bearings are not included. The work "critical" should be replaced because the meaning of the word is very controversial with reference to aircraft bearings.

2. Other thru-hardened steels (52100), case hardened steels (9310,8620 CBS 600) and steel for cages (AMS 6415) should be added.

3. The term "statistically significant" use in 3.1 and 3.2 is not definitive. Requalification per 3.2 should be a quality/engineering audit, not hardware testing.

6. Sub-contractor (usually bearing vendor) should determine if parts can be salvaged or repaired. Contractor should determine if variations or deviations are acceptable.

7. Need to differentiate between significant and insignificant changes. Should include change in facility as significant change.

8. Process specifications and inspection procedures should be approved by Contractor. Deviations must be approved by Contractor engineering and quality.

9. Items 9.1.8, 9.1.9, 9.1.10, 9.1.11 and 9.1.47 should not be on the drawing as these calculated capacities and installation data are not inspectable and are irrelevant with regard to the manufacture of the bearing. Item 9.1.46 should not be included as the packaging is dependent on end useage and cannot be predicted during design. Completely detailing all bearing components on a source control drawing is contrary to the intent of this type of drawing which is to control the bearing design by limiting procurement to the approved sources and by demonstrating performance with suitable qualification tests. If the intention of providing complete details for each bearing component is for engineering reference rather than inspection, then a new procedure must be implemented to allow engineering data to be referenced on these drawings.

10. Inspection methods and processes must be approved and certified by the prime contractor. In 10.2, MRB activity shall be approved by prime contractor. Paragraphs 10.2.2 and 10.2.3 should be deleted.

11. As stated in 2., other bearings steels should be included.

ENCLOSURE (2) COMMENTS ON SPECIFICATION - OPTIMIZED BEARING UTILIZATION

Paragraph

Title -- Suggest title be changed to Specification for Refurbishment and Restoration of Aircraft Engine and Power Transmission Bearings.

Scope -- Should include type of bearings and where these bearings are typically used.

Cleaning -- Other methods besides ultrasonic cleaning should be permitted. In fact, ultra-sonic cleaning will not adequately clean many assembled bearings which have been inducted for overhaul. Also need warning that components from different vendors should not be mixed

Preliminary Inspection -- Does not include provisions for non-separable bearings. Temper colors frequently occur due to oil staining.

NDT Evaluation -- Appropriate specifications and accept/reject criteria should be given for each NDT method.

Visual Examination of Ring Mounted Surfaces -- Dimensional verification should only be required if any wear or build-up is visually detectable.

Determination of Need for Retainer NDT Examination and Replating-- Retainers with bent tangs should not be salvaged if rebending of the tangs is required.

Standard Race Grinding Stock Removals -- Raceway honing should also be included.

Assembly -- Parts should be properly preserved. Preservation requirements not usually depicted on bearing source control drawing.

Marking, Coding and Segregation for Packaging -- Permanent marking is required to indicate that a bearing was refurbished or restored and where the rework was done.

SKF TECHNOLOGY SERVICES
SKF INDUSTRIES, INC.

February 23, 1983

Arthur S. Irwin Co., Inc.
Driftwood
Bemus Point, NY 14712

Attention: Mr. Arthur S. Irwin
President

Subject: SKF Comments Regarding Proposed Specifications for NASA Contract NAS3-23520

Reference: Industry Coordination Meeting Held January 24, and 25, 1983 in Cleveland, Ohio

Dear Mr. Irwin:

As requested during the referenced meeting, below are the SKF comments concerning the ball and cylindrical roller bearing specification and the specification for optimized bearing utilization. The comments detailed in this letter are the same as those that were given by the writer during the two day conference.

Specification for Ball and Cylindrical Roller Bearings

1. Scope: It is felt that the term "critical" should be redefined as it implies a critical bearing application rather than a need to procure bearings in an expedited manner.

2. Applicable Documents Specification: MIL-STD-10 has been replaced by MIL-STD-100. Request AMS 6415 and AMS 6414 cage material and AISI 52100 steel be added. ASTM-B-147-71 Alloy 864 is not an active specification. It has been replaced with ASTM-B-584 Alloy.

3., 3.1 Qualification: It is SKF's opinion that the qualification requirements should be redefined. SKF assumes that the qualification testing would not be performed by the bearing supplier but rather by the O.E.M.

3.2 Requalification: It is felt that the requirement that a statistically significant sample of bearings be requalified no less frequently than every 24 months is too restrictive. We do not see a need to requalify a bearing on this basis if the bearings are in active production and no design changes have been made.

P.O. BOX 515, 1100 FIRST AVE., KING OF PRUSSIA, PA 19406 | (215) 265-1900
TELEX 84-6474 | TWX 510-660-2660

4. Inspection: It is SKF's opinion that the sampling plans that would be acceptable should be spelled out in this specification. We do not believe that the sampling plan should fall under the authority of the cognizant military individual. The sampling plans could be detailed prior to the acceptance of the first production order rather than after. If it is not approved prior to a production order, it would require 100% sampling of all characteristics which could be expensive depending upon how large the first production order is.

4.1 Inspection Details: The first article requirement should be defined in this paragraph.

5. Procurement: No comment.

6. Rejection: The last sentence makes reference to a quality review board. It is SKF's recommendation that it be defined as a Quality/Material review board.

7. Change Control: The way the paragraph is defined it would be very difficult to manufacture a bearing. The bearing suppliers need the flexibility to make decisions to keep the production line moving. It is our feeling that with the paragraph stating that we must receive written approval prior to the implementation of any change, we would not be able to ship bearings to satisfy the critical needs. It is SKF's recommendation that the paragraph state that the change control system of each bearing supplier will satisfy this requirement.

7.1 Change Control Approval: Comments the same as paragraph 7.

8. Process and Inspection Approval: The word "prior" should be changed to "after". The sentence implies that a bearing supplier would have to detail all their production and process controls and may not receive a contract. If a bearing supplier is competitive, then the processes could be approved after the award of the contract.

8.1 The word "specifications" should also be added to the process and inspection changes. Comments are the same as 7 above.

8.2 Process Deviation Approval: There should be an individual specified that a supplier could contact to review and get an opinion regarding the acceptability of a process deviation or change. A lot of time will be wasted while the

official paperwork is sent, received, and forwarded back to the bearing supplier. This again, would not help the supply of critical bearings.

9. Drawing Requirements: The drawing requirements should be specified as required. If all these requirements are placed on the drawing it will involve a great deal of inspection. Therefore, it is suggested that the majority of these items which are not critical to the operation of the bearing be specified as "Engineering Data" or "Reference".

9.1.17 Retainer End Face Parallelism: Should be removed. No need for this requirement.

9.1.24 AMS 2410 plating should be added as an option.

9.1.25 Should be removed since it is very difficult to measure a silverplate corner build-up tolerance on a retainer.

9.1.31 The term "chatter tolerances" should be defined.

9.1.42 It is felt that a specification for each material should be written to control the bearing material procurement.

9.1.45 Identification Requirements: A specification should be written or the identification requirements spelled out in this specification.

9.1.51 The inner ring high point should only be marked on critical bearings if it is required.

9.2 Cylindrical Bearing Requirements: Once again, the majority of the requirements listed in paragraph 9.2 should be identified as "Reference" or "Engineering Data".

9.2.4 Roller Effective Length: Should be defined.

9.2.7 Roller Corner Runout: Should only be specified if required.

9.2.10 Cage Balance: Should only be specified if required.

9.2.11 Cage Diameter for Locating During Balance: Should only be specified if required.

The following items should be added, if required: grain flow, roller end to flange clearance, flange angle and configuration, 2-point and 3-point out of roundness.

9.3 Ball Bearing Requirements:

9.3.1 Contact Angle: Specified only as required.

9.3.4 Shim Thickness: Should be specified as a reference.

9.3.7 Cage Load for Measuring Contact Angle: Should only be specified if required.

9.3.11 Ring Grain: Orientation to be substantially parallel to groove surfaces. The word "substantially" should be defined. It is also requested that this be specified only when required. This requirement precludes the use of hammer forgings, bar stock or tubing for the bearings.

9.3.12 Cage Balance: Specify only when required.

9.3.15 Bearing Preload: This should be specified as required.

9.3.16 Contact Angle Verification Gauge Load: Should be removed.

9.3.18 Stand-off of Ball Groove from locating end face of ring should be removed.

10. Inspection Processes: The words "cognizant military authority as delegated through DCAS" should be removed and replaced with "prime contractor".

10.1 Inspection Methods to be Certified: The term "and processes" should be added after "inspection methods". It should be spelled out who will do the certification.

10.1.1 Material Stabilization Verification: This statement should be defined.

10.1.4 The term "magnaflux" should be replaced with "magnetic particle inspection".

10.1.5 Visual Defect Examination: Should be specified as surface defect examination.

10.1.11 The term "shot beed" should be removed. The term "eddy current inspection" should be added as an acceptable method.

10.2 Material Review Board: Paragraphs 10.2.2 and 10.2.3 should be removed.

10.3 Inspection Standards: The term "industry standards" should be defined as this is a vague statement.

11. Material: This specification only defines M50 type steels. There are many mainshaft and accessory bearings that are manufactured AISI 52100 steels as well as carburized materials. It is SKF's recommendation that different types of materials be added to the materials list.

11.1 Scope:

11.1.1 The term "high speed" should be removed from the type of forgings. This implies that only ring rolled forgings can be used.

11.2 Processes: No comment.

11.3 Reference Specification: No comment.

11.3.1 Aerospace Materials Specifications: Reference to the added materials should be made to this paragraph.

11.3.2 American Society for Testing Materials: ASTM-E604 should be ASTM-A604.

11.4 Chemical Composition: No comment.

11.4.2 No comment.

11.4.3 The paragraph references the limits for carbon content as -.01 under minimum in lieu of + or - 0.03 per AMS 2259. This is a deviation from the current material composition for M50 type steel. SKF is requesting that the requirements, as specified in AMS 2259 be retained.

11.5 Forming Condition: No comment.

11.6 Quality Tests: No comment.

11.6.1 The last sentence makes reference to the fact that the material shall have substantially uniform macro-structure and grain flow. The term "substantially" should be removed from the paragraph.

11.6.2 No comment.

11.6.3 Magnetic Particle Stepdown Test: This requirement should be specified only where required. It is not standard prac-

tice to perform a magnetic particle stepdown test if the material is ultrasonically tested.

11.6.3.1 This paragraph states that specimens shall be taken from 4 inch square billets representing the top and bottom of each ingot. We would prefer that the paragraph state to check the top and bottom of the first, middle and last ingots.

11.6.4 Macroetch: No comment.

11.6.4.1.2 The conditions for freckles, white spots, radial segregation and ring pattern are specified as having a severity reading of "A" for all four items. The ratings for the severity should be changed to A, A, B and C respectively. This is in line with current material inspection requirements.

11.6.4.2 Finished Product Inspection: No comment.

11.6.5 Grain Size: No comment.

11.6.6 Inclusion contest should be "inclusion content". Ratings are specified for inclusion content of both thin and heavy types. The requirements for heavy type B, C, and D which are specified as zeros should be changed to 1.0. The requirements of zero are tighter than current material standards for M50 steel.

11.6.6.1 If inclusion ratings of 1.0 are added in 11.6.6 a statement will have to be added defining the number and quantity of the rateable fields for heavy types.

11.6.7 Ulatrasonic Inspection: No comment.

11.6.7.2 The term "shear" should be defined. In addition, the longitudinal requirement of 20% of the 1/64" flat bottom hole-depth: half of section dimension, appears to be tighter than current standards. It is suggested that the material suppliers be contacted to see if they can consistently meet this requirement.

11.7 Decarburization of Surface Defects: No comment.

11.8 Tolerances: No comment.

11.9 Rejections: No comment.

11.10 Inspection:

11.10.2 The term "original" should be added before "purchaser".

11.11 Material Certification: No comment.

Optimized Bearing Utilization Specification

Scope: No comment.

Cleaning: This paragraph specifically states that ultrasonic cleaning must be used. It is suggested that other cleaning methods be shown as acceptable options.

Preliminary Inspection: Reference is made to bearings which are separable. With separable designs it is easy to review the rolling contact surface. A statement should be added regarding bearings that are non-separable. Those bearings which are non-separable will more than likely have to be dismantled by cutting the cage from the bearing. It is felt in these type bearings the cage and rolling items should automatically be replaced.

NTD Evaluation: The term "magnaflux" should be replaced with "magnetic particle". The term "ultrasonic magnetic resonance" should be removed. In addition, rather than specifying that all the subject NTD's must be performed, it might be better to specify some inspections are required.

Visual Examination of Rolling Contact Surfaces: This paragraph specifies that a 2 to 5 power magnifying glass be used. This should be removed and replaced with the un-aided eye. In addition, reference is made to the evidence of nital etch in this paragraph. It is felt that this should be removed from the examination as this is a NDT requirement.

Visual Examination of Ring Mounting Surfaces: No comment.

Dimensional Verification: Instead of specifying .002" material thickness per side shall be removed, it would be better to specify a maximum material removal amount. There is no need to remove a given amount of material if it is not necessary. In addition, replating is specified. The type and method of plating should be specified.

Visual Examination of Retainer Wear Area: The paragraph implies that the rolling elements can be removed from the bearings. This is possible with separable assemblies, however, bearings which are non-separable should have the retainers

replaced since some sort of cutting, bending or twisting of the cage may be required to remove rolling elements from the non-separable assemblies. Cages and rolling elements should automatically be replaced.

Determination of Need for Retainer NTD Examination and Replating: The term "magnaflux" should be replaced with "magnetic particle inspection". Reference is also made to non-ferrous materials which will be subjected to florescent penetrant examination. It should also be permissible to subject ferrous material cages to florescent penetrant examination.

The second paragraph mentions that the parts should be replaced to the original drawing requirements. In some cases, depending on the degree of wear over maximum plating may be required to bring the dimensions within original drawing requirements. If this is done, then the maximum silverplate thickness as specified in the original drawings may be violated. This should be clarified.

Determination of the Need For Restoration: Once again, a maximum amount of stock removal should be specified.

Standard Race Grinding Stock Removal: As noted above, the requirement that .003" per side material thickness must be removed from each race should be replaced by a maximum depth of stock removal.

Reference is made that the grinding process shall be monitored by nital etch inspection. Different methods should be added, such as eddy current inspection. It also states that the nital etch shall be removed by vibratory finishing. Other methods of etch removal should be specified as options.

Reinspection for Verification of Dimensional Details: The requirement that all characteristics be evaluated 100% to insure compliance with the original drawing requirements should be revised to specify particular dimensions that would need to be evaluated 100%. The rest of the parameters could be checked on a sample basis. In addition, a maximum diameter should be specified for the oversize roller paths.

Procurement of Replacement Rolling Elements: No comment.

Grading and Matching of Diameters and Rolling Lengths to Ring Sets: Specific references is made only to roller bearings. Different types of bearings should also be added to this paragraph.

Preassembly Verification of Assembly of Matched Parts: No comment.

Assembly: Reference is made to specifically using ultrasonic cleaning to clean the parts. Other methods of cleaning should be added to this paragraph.

Post-Assembly Inspection: No comment.

Marking, Coding and Segregation for Packaging: A definite system should be spelled out in this specification which will detail the marking methods allowed. A suggestion would be to use AS478. In addition a requirement should be added for material traceability during the repair process.

Sampling for Qualification Testing and DCAS Verification: A sampling plan should be established in this specification and should not be left up to the appropriate military authority.

I hope that these comments will be useful to you during the review of the proposed specifications. If you have any questions regarding these comments, please feel free to contact me.

Sincerely,

R. A. Litts
Applications Engineering

RAL/jh

cc: J. L. Blake
S. J. Paine

TRW *BEARINGS DIVISION*

January 31, 1983

Arthur S. Irwin Company, Inc.
Driftwood
Bemust Point, New York 14712

Subject: Industry Coordination Meeting - January 24 and 25, 1983
NASA Contract NAS3-23520: Review and Critical Analysis
Rolling Element Bearings for System Life and Reliability.

Dear Art,

At the time of the subject meeting, responses were requested from attendees. Following are TRW's comments regarding specific points. Before proceding to the specifics, I would like to make two general comments.

First - Please accept congratulations on the manner in which the meeting was conducted. You, Bill Derner and Bill Anderson organized a tremendous amount of material for our studies and discussions. Due to the prior organization and the manner in which the meeting was conducted, a tremendous volume of material was reviewed.

Second - There is concern at TRW as to the "over-kill" aspects of the specification. While TRW is in an excellent position to supply bearings to the highest level of technology, there remains a question as to the need for over-specified bearings in every position in every engine or helicopter gear train. Perhaps two levels of sophistication should be considered: one level for high speed, heavily loaded bearings and a second level for lower speed, lightly loaded bearings. In our opinion, the second level should allow the designer to select 52100 steel, for example.

Paragraph 2 - Applicable documents - specifications:

- Specifications listed in Paragraph 11.3 are not included.
- Quality specifications such as MIL-I-45208, MIL-Q-9858, MIL-STD 1535, MIL-STD 1520 are not listed.
- AMS 6414 or 6415 which is used extensively for cage materials is not listed.
- Several comments were made at the meeting regarding the preferability of AMS 2412 silver plating in lieu of AMS 2410.

Paragraph 3 - Qualification

- Requalification criteria should be: a significant change in design, material or manufacturing procedure and plant location. If a part has not been manufactured for a period of time (such as 24 months), a new first article inspection should be performed.

BEARINGS DIVISION OF TRW INC.
402 CHANDLER STREET JAMESTOWN, NEW YORK 14701
TELEPHONE (716) 661-2600 TELEX 91527

MRC BEARINGS

- The engine manufacturers and the helicopter manufacturers indicated that qualification or requalification should be a responsibility of the original prime contractor.

Paragraph 4 - Inspection

- Quality sampling plans must be negotiated before placement of a production order.

  The role of DCAS was discussed. It was pointed out that DCAS does not verify measurements, but monitor quality systems.

- Once process capability is demonstrated, a sampling plan should be permitted.

Paragraph 6 - Rejection

- Rework of parts is an on-going function as part of the regular manufacturing process. Only major repair procedures should be subject to approval. The approval authority should be the prime contractor rather than the cognizant military authority.

Paragraph 7 - Change Control

- The change control as listed is more restrictive than any current requirement from bearing customers. Restrictive change control system will ensure the perpetuation of obsolete manufacturing practices and result in a substantial increase in bearing prices and decreased availability. TRW feels strongly that print and specification requirements should deal with measurable requirements to be incorporated in the bearing, and not focused on nit-picking details as to how the part is manufactured. The imposition of a restrictive change control system could have a result which is entirely counterproductive to the aim of the specification which is to enhance the availability of reliable bearings.

Paragraph 9 - Drawing Requirements

- It seemed to be the consensus of the meeting that engineering data which would be useful in analyzing bearing performance should be supplied by the prime contractor on a separate sheet, rather than to over-complicate the drawing by having details extraneous to the actual material, inspection and manufacturing requirements.
- NDT requirements should be listed on the print as well as the allowability of the use of associated sampling plans.
- Paragraph 9.1.27 should read "other critical retainer details as required".
- Packaging requirements as listed in Paragraph 9.1.46 should not be listed on the drawing.
- Under 9.2 cylindrical bearing requirements, in certain cases it is important that the bearing drawing list additional details such as the roller end clearance, sidewall configuration, roller drop in the cage, and bilobe/trilobe features.
- Under 9.3 ball bearing requirements, it is important that the interrelationship between contact angle, IRC and end play be recognized. Specification of all of these requirements has the impact of drastically increasing prices and loss of availability.

- Paragraph 9.3.11 should be modified to indicate that specific grain orientation should be specified only as required. This also has a substantial increase on costs in many cases.

Paragraph 10 - Inspection Processes

- The prime contractor should have responsibility for reviewing inspection methods and processes, and not DCAS.
- Paragraph 10.1.2 should be worded in such a way as to suggest the allowability of decarburization on non-critical surfaces. Failure to do so will negate many cost reduction programs which are underway to permit the usage of "black" surfaces.
- Usage of eddy current on rolling elements and raceways is accelerating.
- All prime contractors have established methods for dealing with deviated material. Material review board procedures are ordinarily followed for self-authorization of deviant parts. The controls established by the prime contractors have proved to be effective throughout the years.

The following comments are applicable to the proposed specification for optimized bearing utilization (repair/rework/refurbishment):

- The controls established under the new bearing specification outline a carefully controlled approval procedure for original equipment bearings. It is inconsistent that the rework specification does not have similar controls established. TRW is concerned about the product liability aspects of unauthorized sources performing rework on our product.
- TRW has extensive experience in refurbishing mainshaft jet engine bearings We do not ultrasonic clean parts on receipt, but use an abrasive slurry method for preparing the parts for further examination and rework. Lengthly discussions were held regarding rework of non-separable bearings
- Several of the prime contractors pointed out the dangers associated with rebending tangs. There are similar concerns associated with disassembly of the cage in a conrad type bearing and subsequent reuse of the parts.
- NDT evaluation of components should follow the same requirements as exist on the original equipment product.
- Visual examination of rolling contact surfaces. TRW uses the unaided eye. Questionable indications are clarified through the use of magnification. Any parts subject to retempering should be thrown out.
- TRW has had excellent results in replacing all of the original rotating components: inner rings, rollers, balls and cages in our refurbishment program.
- Replating of cages in excess of the amount specified on the prime contrator's print should not be permitted. TRW discards cages showing base wear of the metal.
- FPI should be used as an NDT option to MPI for steel cages.
- TRW questions the economic viability of regrinding in general. The logistics associated with maintaining a supply of components with extra stock as well as special cages to accommodate oversized rolling elements makes this entire procedure questionable. It is very important for critical bearings that the cage pocket clearance not be altered from the original design intent.
- Original equipment requirements do not encompass ultrasonic cleaning for new bearings. The imposition of this procedure for restored bearings is questionable.
- It is believed that the specification should set up a special marking procedure to clearly indicate that the bearing has been reworked, and the source of such reworking.

Sincerely,

Dan

Daniel Lundquist
Manager Aircraft Engineering

DL/ds

MRC BEARINGS

APPENDIX C

ATTENDANCE LIST

SECOND INDUSTRY COORDINATION MEETING

NAS3-23520 June 1-2, 1983

	NAME	COMPANY
1.	Anderson, William	ASICO
2.	Artuso, John	Air Force
3.	Battles, Roy	Bell Helicopter
4.	Biroscak, Ron	FAG
5.	Branhof, Edward	AVRADCOM
6.	Campbell, Arthur	Fafnir
7.	Collinge, Kenneth	AVCO Lycoming
8.	Derner, William	ASICO
9.	Dutta, Mitten	AVRADCOM
10.	George, Richard	Kaydon
11.	Gilbert, Robert	Garrett Turbine Engine
12.	Ironside, William	Pratt and Whitney
13.	Irwin, Arthur	ASICO
14.	Joseph, Martin	TSARCOM
15.	Keller, Carl	Sikorsky
16.	Lagasse, Normand	AVCO Lycoming
17.	Linhares, James	AVRADCOM
18.	Lundquist, Daniel	TRW
19.	Malott, R. Clayton	Detroit Diesel
20.	Morrissey, T. L.	Rollway
21.	Pineo, Carroll	General Electric
22.	Poole, William	Pratt and Whitney

NAME	COMPANY
23. Ross, W. J.	Split Ballbearing
24. Scheidt, R. N.	Detroit Diesel
25. Schuetz, Harold	AVRADCOM
26. Signer, Hans	Industrial Tectonics
27. Weden, Gil	AVRADCOM
28. Zaretsky, E. V.	NASA

APPENDIX D

WRITTEN COMMENTS ON SECOND INDUSTRY COORDINATION MEETING

1. Boeing Vertol Co. letter Sept. 20, 1983 (J. W. Lenski)

   Encl.: Pg. 1 - RRR Spec.

   Pgs. 3,4 - Procurement Spec.

2. Detroit Diesel Allison letter June 29, 1983 (R. N. Scheidt)

3. FAG Bearings Corp. letter June 28, 1983 (R. M. Biroscak)

4. General Electric letter Sept. 6, 1983 (C. B. Pineo)

5. Industrial Tectonics, Inc. letter June 24, 1983 (H. R. Signer)

   Encl.: Pgs. 5 thru 13 - RRR Spec., Glossary

6. Kaydon Corp. letter June 3, 1983 (R. F. George)

   Encl.: Pgs. 5 thru 13 - RRR Spec., Glossary

7. Pratt and Whitney Aircraft Group note June 4, 1983 (W. E. Poole)

   Encl.: Pgs. 5 thru 13 - RRR Spec., Glossary

   letter Sept. 21, 1983 (W. R. Ironside)

8. Rollway letter Sept. 7, 1983 (T. L. Morrissey)

9. Split Ballbearing letter Nov. 3, 1983 (W. J. Ross)

10. TRW Bearings Div. letter June 6, 1983 and Sept. 15, 1983 (D. Lundquist)

BOEING VERTOL COMPANY

P.O. Box 16858
Philadelphia, Pennsylvania 19142

7484-JWL-127

September 20, 1983

Arthur S. Irwin Co. Inc.
Driftwood Center
Bemus Point, NY 14712

Subject: Specification for Ball and Cylindrical Roller Bearings and Rework, Refurbishment and Restoration of Aircraft Engine and Power Transmission Bearings

Dear Art:

The two documents submitted by your letter of August 24, 1983 have been reviewed and several comments are provided in this letter. Boeing Vertol generally agrees with the wording of these documents except for two areas. These areas have been added since the last reading. Our comments concerning these areas are as follows.

1. In both documents, Section 3. - Qualification/Certification
   Reference Enclosures 1 and 2

   Boeing Vertol does not feel that qualification of a bearing can be accomplished by similarity with another part. Each part should be qualified under a given set of load conditions by actual testing of the part. Therefore, this paragraph should be removed from both documents.

2. In the Specification Document, Section 6. - Change Control
   Reference Enclosure 3

   The word significant should be removed and also the last sentence should be deleted. Boeing Vertol does not allow any change in the control plan without prior approval. Many non significant changes have resulted in problems. Therefore, the interpretation of significant should not be made by a person unfamiliar with the part and its application.

BOEING

Other than the few comments made above, the two documents as presented would be acceptable to Boeing Vertol. Most of the requirements of these documents are currently in effect in one form or another. These documents will make it more uniform for all suppliers of aircraft engines or power transmissions.

I hope that these comments will be helpful in finalizing your specifications. If you have any questions concerning these comments, please call me on (215) 522-3902.

Sincerely,

BOEING VERTOL COMPANY

Joseph W. Lenski Jr.

Joseph W. Lenski Jr.
Senior Engineer

/mj

Enclosures

August 5, 1983

SPECIFICATION

Rework, Refurbishment and Restoration of Aircraft Engine and Power Transmission Cylindrical Roller and Ball Bearings

1. Scope - This specification shall provide for the optimized utilization of aircraft engine, main power line transmission and auxiliary bearings determined to be critical either by virtue of their performance, function or availability.

1.1. Sources - Those bearings to be processed under the provisions of this specification may be used bearings removed after service, unused bearings returned from the field, or rejected bearings returned for re-inspection and salvage.

2. Applicable Documents - See Bearing Procurement Specification # for general specifications, standards and other supporting documentation. In addition the following will apply:
MIL B 58105 Bearing Restoring by Raceway Grinding
NAVAIR 01-1A-503 (TM 55-1500-322-24) US Navy Bearing Manual
NAVAIR 02-1-517 US Navy Standard Maintenance Procedures for Pratt & Whitney Aircraft Engines

3. Qualification/Certification - Sources for bearing refurbishment and restoration must be qualified by the original contractor or the cognizant government agency by dynamic testing or quality audit.

~~In lieu of testing of the specific bearing being processed, qualification may be based on prior evaluation of another bearing size or similar material, type and family produced by the source using continued unchanged processes.~~

Refurbished or restored bearings shall be permanently marked to indicate name of procurement agency, as well as all other markings required to ensure traceability.

3.1. Requalification Requirements - On those bearings for which a new facility is to be utilized, or for which a significant process or design change is intended, requalification is required. The cognizant government authority may conduct the qualification by testing or quality audit, or may delegate this responsibility.

3.2. Recertification Requirements - For those bearings which have not been processed for four years or more, recertification of processes and standards by the original/prime contractor is required. As an alternative the cognizant government authority may perform the recertification.

ARTHUR S. IRWIN CO. INC.
Technology Consultants
Driftwood Center
Bemus Point, NY 14712

continued next page .....

ORIGINAL PAGE IS
OF POOR QUALITY

ANSI Y 14.5	Dimensioning and Tolerancing for Engineering Drawings
MIL-STD-045662	Traceability to NBS Standards
MIL-STD-143	Standards and Specifications, Order of Precedence for the Selection of
MIL-STD-1520	Corrective Action and Disposition System for Nonconforming Material
MIL-STD-1535	Supplier Quality Assurance Program Requirements
MIL-STD-271	Nondestructive Testing Requirements for Metals
MIL-STD-880	Engineering Drawing Practices
MIL-I-45208	Inspection System Requirements
MIL-I-6868	Inspection Process, Magnetic Particle
MIL-H-6875	Heat Treatment of Steels (Aircraft Practice) Process for
DOD-STD-100	Engineering Drawing Practices

2.2.2. Supportive Standards referenced in those standards listed in 2.2.1.

MIL-STD-129	Marking for Shipment and Storage

3. Qualification/Certification - Sources for bearing procurement must be qualified by the original contractor, by dynamic testing or quality audit.

~~In lieu of testing of the specific bearing procured, qualification may be based on prior testing of another bearing size of similar material, type and family, produced by the manufacturer using current processes.~~

Bearings Procured by other than the prime contractor shall be permanently marked to indicate name of procurement activity, as well as other markings required to ensure traceability.

3.1. Requalification Requirements - On those bearings for which a new facility is to be utilized, or for which a significant process or design change is intended, requalification is required. The cognizant authority may conduct the qualification by testing or quality audit, or may delegate this responsibility.

3.2. Recertification Requirements - On those bearings which have been out of production for four years or more, recertification of processes and standards by the original/prime contractor is required. As an alternative, the cognizant government authority may perform the recertification.

4. Inspection - Inspection of assemblies and components shall be conducted in accordance with negotiated quality plans which shall include record requirements.

ARTHUR S. IRWIN CO. INC.
Technology Consultants
Driftwood Center
Bemus Point, NY 14712

continued next page .....

4.1. Inspection Details - First article inspection details shall be recorded and maintained as a permanent record. Subsequent inspection requirements shall be per the quality plan.

5. Rejection - All components and assemblies which are rejected may be identified and held for Quality/Material Review Board action. Those components which may be reworked shall be rerouted at the discretion of the manufacturer, providing the original drawing requirements are met. Assemblies may be disassembled and reassembled providing this is accomplished in accordance with the negotiated Quality Control Plan.

6. Change Control - There may be no ~~significant~~ change to the original design, material, tolerances, basic process, quality control plan, heat treat, post heat treat or rework procedures without prior approval of the original contractor or the cognizant government authority. ~~Such approval is to be sought by the processing activity.~~

6.1. Change Control Approval - Any request for change shall be the responsibility of the vendor to submit and obtain approval prior to the initiation of work on the contract.

7. Process and Inspection Approval - All process operations and inspection procedures will be evaluated and confirmed by the original equipment manufacturer or the cognizant government authority or his delegated representative, to ensure compliance with currently accepted aerospace industry standards. This will include all destructive and non-destructive methods and Quality Control Plans and inspection methods.

7.1. Process and Inspection Changes - These shall be requested and approval pursued as stated in paragraph 6, with the exception that processing may continue, verbal approval having been granted. It shall be the responsibility of the vendor to provide documentation in each such instance.

8. Drawing Requirements - Drawings shall be in accordance with DOD-STD-100 and MIL-STD-880 and shall contain the information listed in the following paragraphs. Where existing drawings are incomplete, they may be supplemented to include the following data: bearing usage(s), qualified sources, change numbers, bearing installation and operating data necessary for analysis of the bearing as applied, etc. Separate sections may be utilized to define design and include process data and details to be covered by Quality Control requirements.

8.1. General Bearing Requirements, where specified

continued next page .....

Detroit Diesel Allison
Division of General Motors Corporation

Indianapolis Operations
P.O. Box 894
Indianapolis, Indiana 46206-0894
Phone: (317) 242-5000
Cable: GM COMM IND A

June 29, 1983

File No. A0491

Arthur S. Irwin Co., Inc.
Driftwood Center
Bemus Point, NY 14712

Dear Mr. Irvin:

During the meetings of June 1 and 2, 1983 at Cleveland with representatives of your company, NASA - Lewis Research Center, U. S. Army and U. S. Air Force, aircraft engine and air frame builders and rolling bearing manufacturers revisions of two proposed military specifications were discussed in considerable detail. These revisions were based on your consideration of those comments, both verbal and written, resulting from our previous review during similar meetings of January 24 and 25, 1983. The first specification covers the requirements for the qualification and procurement of gas turbine engine mainshafts and propulsion power train rolling element bearings. At the discretion of the cognizant military authority, this specification may also be applied to those bearings in critical supply. The second specification is described as the requirements for the rework, refurbishment and restoration of aircraft engine and power transmission cylindrical roller and ball bearings. This latter specification includes the means of determining if such action is required and if required how this is to be done.

It is in response to your request for written comments form the attendees that the following comments are made. Where appropriate these comments are referenced to the proposed specification copies distributed prior to the above meeting in terms of page number, section number or heading, paragraph number and line number. Where comments outside of the discussion and consensus at the above meeting are necessary such rationale is also included.

Specification for Ball and Cylindrical Roller Bearings. This specification dated April 29, 1983 now includes materials other than the M50 tool steel initially discussed. For the M50 tool steel the inherent hardness characteristic is very desireable but its inherent brittleness at times leading to its very rapid crack propagation and ultimate failure has been considered by some as very undesireable.

DA 1-1 (4-82)

Page 2, Section 2.1. Specifications AMS6265 and AMS6276 should be considered for inclusion.

Page 4, Section 8.1.16. The portion of the first sentence in the note beginning with "retainer" and ending with "tangs" should be omitted.

Page 4, Section 8.1.17. The word "mounted" should be replaced with the word "unmounted".

Page 5, Section 8.1.22. Insert the word "pockets" before the word "and".

Page 5, Section 8.1.23. Change to "Lobing, waviness and chatter tolerances applicable to bore and outer diameters".

Page 5, Section 8.1.24. Replace the word "required" with the word "requirements".

Page 5, Section 8.1.28. Consider replacing "VCEM" with "CEVM" in three places. Consider adding "VIM-VAR 52100" and "VIM-VAR 9310".

Page 5. Section 8.1.30.1. Discussion indicated that the contention that rolling elements having a hardness one to two points Rockwell"C" harder than the rings provide improved fatigue life is controversial.

Page 5, Section 8.1.31 Some concern was expressed as to whether AMS7276 should be replaced with AMS6276 as the proper specification.

Page 5, Section 8.1.32, Line 4. Replace "traceablility" with "traceability".

Page 5, Section 8.1.34. Delete "for all evidence".

Page 6, Section 8.2.2. Add "and diameter".

Page 6, Section 8.2.12. Insert "and length" after the word "Diameter".

Page 6, Section 8.3. Add after "Ball Bearing Requirements", "In addition to the general requirements listed in paragraph 8.1, the following are required for ball bearings:".

Page 6, Sections 8.4.1, 8.4.2, 8.4.3, and 8.4.4. The consensus of the discussion indicated omitting these load ratings. I believe that some standard for load ratings should be specified.

Page 7, Section 8.4.6. Omit. This is already covered in section 8.1.5.

Page 7, Section 8.4.8. Omit.

Page 7, Sections 8.4.9, 8.4.10 and 8.4.11. Omit. This is already covered in Section 8.3.

Page 7, Section 9.1.5. There was some question how a visual inspection could be certifiable as a meaningful record.

Page 7, Section 9.2.1. Specification MIL-STD-45616 may be included as a reference standard.

Page 9, Section 10.4.2, Line 2. Replace "4.1" with "10.4.1".

Page 11, Section 10.6.6.1, Line 6. Consider replacing "thick" with "heavy".

Page 12, Section 10.10.3, Line 1. Correct "mehtods" to "methods".

Page 13, Item 10, Line 2. Correct "cord" to "cold".

Specification for Rework, Refurbishment and Restoration of Aircraft Engine and Power Transmission Cylindrical Roller and Ball Bearings. The initial four page draft of this specification has been expanded to thirteen pages dated May 18, 1983. The following comments apply to the later draft.

Page 1, Title. Insert the word "Roller" after the word "Cylindrical".

Page 1, Section 2. Include the respective titles to the three specification to the three specified documents.

Page 1, Section 3. The threshold of acceptance for this dynamic test for qualification should be specified. It is suggested that confidence statements, performance ratios and relative criticality be a part of such a definition.

Page 2, Section 6, Line 4. Insert the word "rework" before the word "manufacturer".

Page 2, Section 6, Line 6. Should read in part "in accordance with a negotiated quality control plan.".

Page 3, Section 10.1, Item e. Inactive and active surfaces are to be defined.

Page 3, Section 10.1, Item g. Dynamic testing to be further defined relative to noise level, torque characteristics and/or similar dynamic parameters.

Page 3, Section 10.2, Item c. Add "or provide new components".

Page 3, Section 10.5. Original identification should also be maintained. Traceability of all components should be provided.

Page 4. Cleaning methods should allow adequate alternate methods in four places on this flow chart.

Page 5. See later comments relating to regrinding.

Page 6, Bore Diameter. Replace the word "Inside" with "Inner".

Page 6, Boundary Dimensions. Replace "corner.(s)." with "corner(s)".

Page 6, Burnish. Burnish is more commonly used as a verb or processing method rather than a condition.

Page 7, Dimensional Stability. Could be more directly defined in terms of metallurgical transformations and corresponding volumetric increases or decreases.

Page 7, Dynamic Balance. Consider changing to "That condition for a rotating body where the axis of rotation is a true principal central axis of the body.".

Page 7, Eccentricity. This parameter is a linear distance. Consider "The linear distance between the center of a generated circular (cylindrical) surface with respect to the center of another generated circular (cylindrical) surface of the same body.".

Page 8, Inclusion. Consider omitting the word "molecular".

Page 8, Inspection, 100%. Replace "Specified" with "specified".

Page 8, Lands. Replace "flat" with "cylindrical".

Page 8, Land Riding Retainer, Line 2. Add the word "land" after the word "ring".

Page 9, Nominal. Consider "Characteristic or typical value".

Pae 9, Particulate. Delete"Existing in the form of".

Page 10, Profile (measured). Replace the word "obtaimed" with "obtained".

Page 11, Rating Life (L10), Line 2. Replace "atain or exceed" with "attain".

Page 11, Roller. Consider "Cylindrical rolling element.".

Page 12, Skew. Correct "nonsymetrical" to "nonsymmetrical" or "asymmetrical".

Page 12, Smearing or Pickup, Line 1. Correct "die" to "due".

The title of this proposed specification is not fully descriptive in that bearing rework as described in section 10 is divided into three categories, namely processing, refurbishment and restoration. Processing bearings involves the lowest level of effort and includes demagnetization, cleaning, non-destructive testing, visual inspection, minor repair (buffing and polishing), dimensional inspection, dynamic testing, lubrication and packaging. Refurbishment of bearings includes the above processing of bearings and one or more of replacing rolling elements, reworking or replacing retainers, interchanging components, buffing or housing of mounting surfaces and housing of raceways (less than 0.00015 inch total metal removal per surface). Restoration of bearings includes processing of bearings and refurbishment of bearings as well as one or more of raceway grinding (up to 0.002 inch per surface), installing oversize rolling elements and installing a replacement retainer when required.

The above possibilities result in the following areas of serious concern.

1. Traceability. A set of records properly maintained would be required for each individual bearing to determine which agency, original manufacturer and all subsequent reworking groups have contributed and in what way to the current condition of this particular bearing. Mixed lots of manufactured components are also likely to be involved.

2. Product Liability. In addition to the original manufacturer, the various aircraft engine and power transmission builders and end users another group of remanufacturers contribute to the well being or degrading of individual bearings and their performance capabilities. This tends to force innocent parties to be liable should litigation occur.

3. Readiness. New replacement components for bearings are likely to be made by currently established bearing manufacturers. On this basis manufacturing replacement components may be considered as small lots of various specialty items and thus are not considered commercially attractive until accumulative quantities are sufficiently large which in turn results in protracted delays in delivery. A possible alternative is to have smaller, less experienced personnel and limited or inadequate facilities be used to shorten promised delivery times. This latter alternative may be expected to provide an inferior product. This dilemma would especially apply to non-standard rolling elements and cages.

4. Degradation of Reliability. The effect of regrinding raceways on reworked bearing fatigue life was discussed June 1 and 2. The conclusions reached from these comments are certainly not clear. Some have said that reworked bearings used in commercial aircraft perform as well or better than new bearings. Similar activities in Israel for aircraft usage was described by Mr. E. V. Zaretsky of National Aeronautics and Space Administration (NASA). Current inspection and a fatigue life testing program at Southwest Research Institute was described by Mr. M. Joseph of the U. S. Army Troop Support and Aviation Material Readiness Command (TSARCOM). However hard data for the above situations was not presented.

In the 1950's a prominent ball bearing manufacturer ran controlled laboratory tests to evaluate the endurance qualities of used bearing rings which had been ground to remove all surface evidence of fatigue failure. Test results indicated the following:

1. Fatigue failure is likely to recur in a short period of time at the same location of previous distress. The heavier the load, the more likely is the recurrence and the worse the life comparison.

2. Surface fatigue failure is more likely to occur in reground bearings than in new bearings even when no surface fatigue had occurred in the original bearings prior to regrinding.

During intended usage rolling bearing raceway and rolling element materials undergo subsurface metallurgical changes. Mr. T. A. Harris[1] describes this with photomicrographs as stress cycled structure having white deformation bands and lenticular carbide formations and showing orientation of carbides to direction of rolling. This almost certainly indicates that that material undergoing such changes has given up some of its initial fatigue resistance. Therefore in order to provide a reworked bearing with fatigue resistance equivalent to that for a new bearing nearly all of the stress cycled material should be removed. Further if the bearing raceways had been heat treated in a manner to provide a beneficial residual stress field regrinding the raceways would further degrade the bearing fatigue resistance through altering the residual stress field.

---

1 T. A. Harris, "Rolling Bearing Analysis", John Wiley and Sons, Inc., New York, N.Y., 1966, pages 134-136.

FAG BEARINGS CORPORATION

100 years of industrial ball production

1883
1983

100 years in the precision bearing industry

118 HAMILTON AVE. P.O. BOX 811
STAMFORD, CONNECTICUT 06904
PHONE: (203) 327-1960/TELEX 96-5934
TWX 710-474-0891/CABLE FAG USA

June 28, 1983

Arthur S. Irwin Co., Inc.
Driftwood
Bemus Point, New York 14712

Attention: Mr. Arthur S. Irwin, President

REF: FAG Comments Regarding June 1, 2, 1983 Industry Coordination Meeting

Dear Mr. Irwin,

SPECIFICATION FOR BALL AND CYLINDRICAL ROLLER BEARINGS

Of greatest concern towards implementation of this specification is the need for "qualification" of any bearing made by a manufacturer that has not previously made the particular design. FAG feels that the prime contractor must coordinate between the bearing manufacturer and the particular government agency to assure all parties of ending up with a safe, trouble free bearing.

On the subject of rolling element vs ring hardness, it depends on the individual case but in general FAG doesn't believe that the rolling element hardness should be harder than the rings. Once again this should be up to the engine, airframe manufacturer and bearing company to decide.

As discussed, specifics regarding materials should be left out of this particular specification.

As far as a permanent record is concerned in paragraph 4.1, we feel that it should be a specified number of years or stated per P.O.

Finally, it can be said that we will support the intent of this document providing the revisions of our June meeting are made and the major question concerning qualification and certification of the manufacturing house are resolved between the U.S. Government and the prime contractor. Before giving final acceptance FAG would like to see the finalized specification.

SPECIFICATION FOR REWORK AND RESTORATION OF AIRCRAFT ENGINE AND POWER TRANSMISSION CYLINDRICAL ROLLER AND BALL BEARINGS

As the question concerning liability is still not a cut and dry subject, FAG feels that rework and restoration of bearings should only be done by certified aircraft bearing manufacturers.

(cont'd)

June 28, 1983

Arthur S. Irwin Co., Inc.
Bemus Point, New York 14712

Attention: Mr. Arthur S. Irwin, President

REF: FAG Comments Regarding June 1, 2, 1983 Industry Coordination Meeting

As liability is a prime concern the specification should address this subject to at least some degree.

The same comments regarding qualification as stated in the "specification for ball and cylindrical roller bearings" apply here. The P.C. should be involved in this process at least as a coordinator.

Another comment regarding this specification is that an additional technical document must be formulated related to engineering specific requirements controlling refurbishment.

In the definition section although it may be picky the definition of a "ball" is left out and the "roller" definition is not specific enough.

Section 10.2.e (refurbishment) should be restated to read "honing (superfinishing) of raceways (not to exceed .00015" total metal removal per surface) as well as polishing of all active and inactive surfaces (not to exceed .00008" in total metal removal per surface).

In paragraph 5.1 the permanent record should be specified to a certain number of years or stated on the P.O.

Finally, the subject of part marking must be further addressed as well as acceptable number of times a bearing can undergo "restoration".

Finally, FAG will support this document providing the June meeting comments as well as those stated above are taken into account and providing the coordinated engineering drawings are submitted for approval. Before giving final acceptance FAG would like to review the finalized specification.

Sincerely,

Ron M. Biroscak/dn

Ron M. Biroscak
Aircraft Sales Engineer

RMB:dn

GENERAL ELECTRIC

AIRCRAFT ENGINE BUSINESS GROUP
GENERAL ELECTRIC COMPANY • 1000 WESTERN AVENUE • LYNN, MASSACHUSETTS 01910 • (617) 594-0100

September 6, 1983

Subject: Specification, Ball/Roller Bearing.
Specification, Refurbishment/Restoration.

Arthur S. Irwin Co. Inc.
Driftwood
Bemus Point, N. Y. 14712

Gentlemen:

In response to your request to express a position on the subject specification effort, the following comments reflect our appraisal of the matter.

In general we agree with the intent of the effort to more precisely describe and control precision bearings for use by the military where this description and control has been absent in the past.

At the present time, our drawing and specification system encompasses all of the material addressed by the two proposed documents, and therefore they are considered to be superfluous in our case. The worry item here is the tendency for the proposed specification to request not only the required information sought but also impose specific limits. This is contrary to most documents of this nature and can lead to conflict and complicated contract negotiations.

The subject specifications should also include wording to the effect that existing drawings and specifications meeting the intent of the proposed specifications are acceptable and may be used in lieu of these proposed specifications.

Yours truly,

CBPineo

C. B. PINEO, Principal Engineer
Bearings & Lube Systems Technology
IMZ 240G7, ext 4784

/m

cc JC Clark, H62, Evendale
PA Chipouras, Manager-Lynn Products Eng'g Dept., 240G6

INDUSTRIAL TECTONICS, INC.
18301 SANTA FE AVENUE, RANCHO DOMINGUEZ, CA 90224 • (213) 537-3750
MANUFACTURERS OF PRECISION BALLS AND BEARINGS
bearing division

June 24, 1983

Arthur S. Irvin Co., Inc.
Technology Consultants
Driftwood Center
Bemus Point, NY 14712

Industry Coordination Meeting on Contract NAS 3-23520
(a) Specification for Ball and Cylindrical Roller Bearings.
(b) Specification - Rework, Refurbishment and Restoration of Aircraft Engine and Power Transmission Cylindrical-Roller and Ball Bearings.

Gentlemen:

It was a pleasure to attend the meetings of June 1 and 2, 1983. I felt that all participants offered constructive critiques, worthy of your consideration.

My written comments are somewhat delayed due to interference by several schedule-sensitive projects. Hope they can still by considered in your final evaluation. Generally I feel that the specs will be accepted by the industry if the major comments offered at the meeting are incorporated. The following critique includes some rather major points which should be addressed, as well as a few harmless editorial suggestions.

(a) Specification for Ball and Cylindrical Roller Bearings.

Paragraph 2. Applicable Documents: As mentioned in my earlier letter the specification should indicate in what way the listed documents are to apply. The present text contains specs not listed in para. 2.1. Conversely, this paragraph lists several specs which are never implemented by the text. We also recommend that the latest document revisions at the time of a RFQ apply to the pertaining contract.

Paragraph 3.1.1. Bearings which have been out of production for four years should require requalification only if the results of a vendor quality audit indicate the need for requalification.

Paragraph 5. Rejection: The third sentence could be rephrased as follows: "Bearings may be disassembled, components reworked, and reassembled when done in accordance with established procedures."

Paragraph 6. Change Control: "There may be no significant change to the original design, material, tolerances, basic processes,..."

[Underlined sections denote inserted or changed wording in existing text.]

Paragraph 7. "Process and Inspection Approval - Unless previously accomplished, after award of.... This will include Quality Control plans and all destructive and non-destructive test and inspection methods."

Paragraph 7.2. Editorial comment: "...with the exception that processing may continue, based on verbal authorization to proceed..."

Paragraph 8. "Drawing requirements - the required characteristics.... Drawings shall consist of three sheets:

(a) Sheet 1 will define the bearing design, including the applicable process data listed in this paragraph, and the outlined quality control requirements.
(b) Sheet 2 will list bearing usage(s),...
(c) Sheet 3 ...

[Don't know why sheets 2 and 3 couldn't be combined.]

Paragraph 8.1.27 should be inserted after 8.1.9.

Paragraph 8.1.30. Suggest a maximum hardness also be spcified.

Paragraph 8.2. "...requirements listed in 8.1, the following data shall be furnished for cylindrical roller bearings, as applicable:"

Paragraph 8.2.4. "Nominal roller O.D. flat length and centrality"

Paragraph 8.2.12. "Roller diameter and length variations within one roller set"

Paragraph 8.3. Ball Bearing Requirements: A similar introductory statement as used in paragraph 8.2 should be used (see also note regarding 8.2, above).

Paragraph 8.3.11. "Bearing axial preload, if applicable."

Paragraphs 8.4.3. and 8.4.4. - There is a need for clarification. ITI made this same observation in the February 18, 1983, review.

Paragraphs 8.4.11. and 8.4.12. should appear in paragraph 8.3.

Paragraph 8.4.13 - Delete, as this appears as 8.1.12.

Paragraph 10 - Prior to issuing this specification it is mandatory that this section be reviewed by several steel manufacturers to ascertain that commercially available material meets all the specified requirements.

(b) Specification - Rework, Refurbishment and Restoration of Aircraft Engine and Power Transmission Cylindrical-Roller and Ball Bearings.

Paragraph 2. Applicable Documents - Suggest the spec titles be added to the associated numbers.

Paragraph 3. Qualification - Define "dynamic test."

Paragraph 3.1. Requalification - The same comment applies as for paragraph 3.1.1 of spec for ball and roller bearings, above.

Paragraph 6. Rejection - See comments for paragraph 5 of spec for ball and roller bearings, above.

Paragraph 7.1. It appears useful to have a means for requesting changes during work on a contract.

Paragraph 10.1. (e) - Buffing and polishing of active surfaces should be restricted.

Paragraph 10.3. Restoration should be preceeded by a detailed design analysis of the modified geometry to assure that the restored bearing will have same integrity as original design. This analysis must, as a minimum, evaluate internal bearing geometry (radial and end play, contact and shim angles as applicable) as well as cage-to-rolling element interfaces (pocket clearances and interaction with retention features).

Grinding of bearing surfaces should be performed only by qualified bearing manufacturers.

Regrinding one raceway and replacing the mating ring, using new standard-size rolling elements, should be listed as a viable option to the process now shown.

Paragraph 10.5. Identification should include a symbol or code indicating the level of rework and number of reworks performed.

Flowcharts, figures #1 and #2: The initial bearing inspection should result in a decision regarding subsequent activities: either per 10.1 or 10.2 or 10.3. Hence, refurbishment (10.2) and restoration (10.3) should be shown as parallel (either/or) activities rather than in-series activities. It seems to make little sense to first refurbish a bearing and subsequently restore it.

The footnotes to figure #2 should be deleted. Instead refer to applicable text in the body of the specification.

Appendix A - Glossary. Don't fully understand the value of this section. Per your request, I am enclosing a copy, marked with minor comments.

I'll be pleased to answer any questions you might have on the above.

Sincerely yours,

Hans R. Signer
Chief Engineer

HRS:lm

Enclosure

ORIGINAL PAGE IS
OF POOR QUALITY

APPENDIX A - GLOSSARY

AA - Finish: Arithmetic Average - a numerical value of surface finish obtained by measuring the vertical distance from the mean line of an irregular surface to the profile in the same manner as with RMS, adding these measurements and dividing by the number of measurements.

ABEC 1, ~~ABEC 3~~ (no longer exists), ABEC 5, ABEC 7, ABEC 9: Annular Bearing Engineers Committee (AFBMA) designations indicating degrees of ball bearing precision.

Absolute Filters: Filters capable of filtering out given size particles with near 100% efficiency.

Active Surfaces: The contact areas on the rings and rolling elements that are generated as the bearing is rotated.

AFBMA: Anti-Friction Bearing Manufacturers Association

Angular-Contact Bearing: A type of ball bearing whose internal clearances and ball raceway locations are such as to result in a definite contact angle and predetermined relationship of inner to outer ring faces.

ANSI: American National Standards Institute

Antifriction Bearing: A bearing using rolling elements such as balls, rollers or needles.

AQL: Acceptable Quality Level is a value specified for a type or group of defects characteristics of an item or product. The specified AQL value (example - AQL of 0.4) is referred to in the appropriate sampling plan table of MIL STD 105. The number of defects for each AQL is then obtained that will determine whether to accept or reject the lot.

Axial Clearance: see End Play

Axial Load (Thrust): ~~Pressure~~ Force applied to the bearing ~~parallel to~~ in line with the bearing axis.

Back-to-Back Assembly: A duplex pair of matched ball bearings with outer ring backs adjacent. (incomplete definition

Ball Complement: Size and number of balls used in a ball bearing.

Bearing Axis: The imaginary center line about which the outer or inner ring will ~~turn~~ revolve.

Bearing Stack: Matched multiple assembly of two or more bearings.

ARTHUR S. IRWIN CO. INC.
Technology Consultants
Driftwood Center
Semus Point, NY 14712

continued next page .....

ORIGINAL PAGE IS
OF POOR QUALITY

Bore Diameter: Inside diameter of inner ring.

~~Bore, Inner Ring: Surface area of bore diameter.~~ (delete)

Bore, Outer Ring: Inner diameter ~~surface or land area.~~ of outer ring.

Boundary Dimensions: Dimensions for bore, outside diameter, width and corner(s).

Burnish: A luster or polish on a surface by friction or rubbing contact.

Cage (retainer, separator): A device, partially surrounding the rolling elements and traveling with them, with themain purpose of spacing the rolling elements in proper relationship to each other.

Centrifugal: Moving or acting in a direction away from a center or axis of rotation.

Clearance, Axial: see End Play

Clearance, Radial: Radial internal clearance is the total diametrical movement of the unclamped ring when the specified radial load is reversed.

Cone: The inner ring of a tapered roller bearing.

Contact Angle: Angle between plane perpendicular to bearing axis and line drawn between centers of contact of balls to inner and outer ring raceways.

Convex: A surface that is curved ~~or bulged~~ outward in the center.

Corrosion: A process which destroys the metal by chemical or electrochemical action and converts it to an oxide, hydroxide, or sulfate compound.

Crack: A break, fracture, fissure, crevice or separation in the structure of the part.

Critical Defect: A defect that judgment and experience indicate is likely to result in hazardous or unsafe conditions for individuals using, maintaining, or depending upon the product; or a defect that judgment and experience indicate is likely to prevent performance of the tactical function of a major end item such as an aircraft, missile or space vehicle.

Crowned Roller: Having a very large radius profile on both sides of a straight cylindrical center section to provide a modified line contact with the raceways.

Defect: (discrepancy) Any deviation of a part from specified requirements.

ARTHUR S. IRWIN CO. INC.
Technology Consultants
Driftwood Center
Bemus Point, NY 14712

continued next page .....

Diametral Clearance: see Clearance, Radial

Dimensional Stability: The degree of stability that hardened steel may have to resist growth or permanent expansion (a function of the amount of retained austenite.)

Duplex Bearing: Matched set of two preloaded bearings.

Dynamic Balance: That condition in a rotating body where the mass axes are coincident or the same as the rotational axis.

Eccentricity (radial runout): Occurs when the center of one circular surface is not coincident (the same) as the center of another surface. Ex: Nonuniform thickness between the bore and the ball groove of an inner ring.

End Play (Test): The bearing is to be lubricated with light oil and one of its rings clamped to prevent axial movement, the specified reversing measuring load is applied to the unclamped ring so that resultant movement of that ring is parallel to the bearing axis, the end play is the total movement of the unclamped ring when the load is applied first in one direction and then the other.

Flaking: A condition of advanced surface fatigue where small pieces of metal are loosened from the base material.

Fluting: A form of pitting in which pits occur in a regular pattern so as to form transverse grooves or flutes in the raceway.

Fretting (fret wear, fretting corrosion, false brinelling): The rapid abrasion that occurs at the interface between contacting, highly loaded metal surfaces when subjected to vibratory motions or low amplitude. Usually accompanied by the formation of oxides of the abraded metal.

Galling: The transfer of material from one surface to another during sliding contact.

Groove Runout with Reference Side, Inner ring: see Raceway Runout with Reference Side, Inner Ring

Groove Runout with Reference Side, Outer Ring: see Raceway Runout with Reference Side, Outer Ring

Hardness: Resistance of metal to plastically deform, determined by indentation.

Height of Raceway Shoulder: ~~Vertical~~ distance from bottom of raceway

ARTHUR S. IRWIN CO. INC.
Technology Consultants
Driftwood Center
Remus Point, NY 14712

continued next page .....

to inner ring outer diameter or outer ring diameter (same as race depth).

Inclusion: A void, discontinuity, or solid foreign particle in the molecular structure of metal.

Inner Race: Raceway of inner ring

Inner Ring: The inner component of a bearing.

Inside Diameter: Dimension across center of ring bore. May be used to express dimension across bore of snap ring, shield, seal, etc.

Inspection: The process of measuring, examining, testing, or otherwise comparing the unit or product (bearing) with the requirement.

Inspection, Quality Conformance (CQI): All examinations and tests performed for the purpose of determining conformance with specified requirements.

Inspection, 100%: An inspection in which Specified characteristics of each bearing are examined or tested to determine conformance with requirements.

Internal Clearance: see Clearance, Radial

Lands: The flat surfaces on both sides of the raceway or rings.

Land Riding Retainer: A retainer guided by either the inner ring or outer ring.

Laps: Discontinuities or irregularities in the material as a result of ~~working~~ heading or forging.

Lay: Direction of the predominant surface pattern.

Loading Groove (filling slot): Notch in raceway to permit assembly of a maximum number of rolling elements.

Loading Groove Bearing: A bearing of maximum capacity type, in which there is introduced, by means of a filling slot or loading groove, more balls or rollers that can be incorporated in a non-filling slot or Conrad-type bearing.

Lot: This term shall mean "Inspection Lot", a collection of bearings or kits from which a sample is to be drawn and inspected to determine conformance with the acceptability criteria.

Lot Size: The lot size is the number of bearings in a lot.

Major Defect: A defect other than critical, that is likely to result in failure, or to materially reduce the usability of the product for its in-

tended purpose.

Martensite: A phase of steel with a body-centered crystalline structure characterized by a needle like microstructure.

Matching: Inner and outer rings in duplex bearing sets that are matched for preload, bore, O.D., and eccentricity, within specified tolerances.

Micron: One millionth of a meter, 1 micron equals .00003937 inches.

Minor Defect: A defect that is not likely to materially reduce the usability of the bearing for its intended purpose, or is a departure from established standards having minimal ~~bearing~~ influence on the effective use or operation of the unit.

Nominal: Approximate or rated value.

Outside Diameter Squareness with Side (Test): One side of the outer ring is supported on a flat plate of suitable dimensions (with inner ring free) and held against a stop located close to the lower corner of the outside diameter. The indicator is applied directly above the stop close to the upper corner of the outside diameter. The deviation from the outside diameter squareness with side is the difference between the minimum and maximum reading of the indicator when rotating the outer ring one revolution.

Parallelism of Sides: The difference between the largest and smallest width of the bearing rings.

Particulate: Existing in the form of very small separate particles.

Periphery: The external boundary or surface of a body.

Pitch Diameter, Rolling Elements: The diameter of the center line of the rolling elements.

Pitting: Minute removal of ~~raceway or ball~~ material from surfaces through fatigue, corrosion or electrical arcing.

Plastic Flow: Deformation that permanently remains after removing the load which caused it.

Pocket, Cage: That portion of cage which is shaped to receive the rolling element.

Precision: The degree of agreement of repeated measurements of a quantity. Compare with accuracy.

ARTHUR S. IRWIN CO. INC.
Technology Consultants
Driftwood Center
Bemus Point, NY 14712

continued next page .....

Preload: Intentional thrust loading of a bearing in a unit to increase rigidity. Preloading ~~decreases deformation and deflection by absorbing the initial portion of the deflection curve which is steep and increasing at a high rate. The result is that the deflection is more uniform and has less magnitude throughout the loading range.~~ results in increased bearing stiffness.

Processed Bearing: A bearing that has been used and then cleaned, inspected, gaged, tested and preserved for additional use.

Profile: The contour (external outline) of a surface in a plane perpendicular (right angle) to the surface.

Profile (measured): A representation of the profile abtained by instrumental means.

QCL: Quality Characteristics List

Race: see Ring

Raceway: The contact path of the rolling element on rings of rolling bearing.

Raceway Diameter: Diameter of the inner or outer ring raceway of a bearing.

Raceway, Inner Ring: ~~Track or~~ groove for rolling elements in the inner ring.

Raceway, Outer Ring: ~~Track or~~ groove for rolling elements in the outer ring.

Raceway Runout with Reference Side, Inner Ring (Test): Mount bearing on arbor having a very slight taper (preferably 0.0001 to 0.0002 in. on the diameter per inch of length). Support outer ring in horizontal position and apply indicator to side of inner ring. The deviation from groove parallelism with side is the difference between the maximum and minimum reading when rotating the arbor one revolution.

Raceway Runout with Reference Side, Outer Ring (Test): Mount bearing on arbor having a very slight taper (preferably 0.0001 to 0.0002 in. on the diameter per inch of length). Apply a true running weight to the outer ring. Support arbor in a vertical position and apply indicator to side of outer ring. The deviation from groove parallelism with side is the difference between the maximum and minimum reading when rotating outer ring one revolution.

Radial Clearance: see Clearance, Radial

ARTHUR S. IRWIN CO. INC.
Technology Consultants
Driftwood Center
Bemus Point, NY 14712

continued next page .....

Radial Load: ~~Pressure~~ Force applied to the inner or outer rings perpendicular to the bearing axis.

Radial Runout (Test): Mount bearing on arbor having a very slight taper (0.0001 to 0.0002 in. on diameter per inch of length). Apply indicator on center of stationary outer ring. The radial runout is the difference between the minimum and maximum reading when rotating the arbor one revolution. Corrections should be made for the inaccuracy of the arbor.

Radial Type Bearing: A rolling element bearing primarily designed to support a radial load perpendicular to shaft axis.

Random Sampling: Plan for choosing sample units in a random or nonregular pattern for quality inspection.

Rating Life (L_{10}): Number of hours at a given speed that 90% of a group of identical bearings will atain or exceed before the first indication of fatigue cracking or spalling.

RBEC 1, RBEC 5: Designations indicating degrees of roller bearing precision. Roller Bearing Engineers Committee (AFBMA)

Refinish: To restore an existing surface finish without removing all the existing finish.

Refurbish: To repair bearings by replacement of worn and/or defective parts, ~~and resurfacing any surface including raceways~~. ?

Restoration: To return a bearing to original assembly print dimensions by regrinding raceways and rebuilding with oversize rolling elements. ? is this the only definition?

Retained Austenite: ~~Unconverted~~ austenite phase remaining in steel after heat treating to obtain the harder, more fatigue resistant martensitic steel.

Retainer: see Cage

Rework: The overall procedure for cleaning, reworking, refurbishing, restoring and reissuing of used or rejected bearings.

~~(Fh Ready for issue~~.

Rockwell Hardness Test: A test for determining the hardness of a material based on the depth of penetration of a specified penetrator into the specimen under specified load conditions.

Roller: Load-carrying cylindrical rolling element.

ARTHUR S. IRWIN CO. INC.
Technology Consultants
Driftwood Center
Demus Point, NY 14712

continued next page .....

~~Roller Assembly: Rollers and cage~~.

Roller Complement: Size and number of rollers in a bearing.

Roller Diameter: Maximum ~~circular dimensions~~ diameter of straight rollers.

Roller Length: Distance between the ends or faces of the roller.

Rolling Bearing: A bearing using rolling elements such as balls, rollers, or needles to reduce friction and to support load.

Runout: The amount ~~that one surface lacks of being true with another surface~~ of eccentricity between surfaces of the same part.

Runout, Radial: see Radial Runout

Sample: A sample consists of one or more parts drawn from a lot, the parts being selected at random without regard to their quality.

Sampling Plan: A sampling plan indicates the number of bearings from each lot which are to be inspected and the criteria for determining the acceptability of the lot.

Scratches: Linear abrasions on the surface.

Scuffs: A series of small superficial or shallow scratches.

Separable: A bearing assembly that may be ~~separated~~ disassembled completely or partially ~~into~~ without deforming any of its component ~~parts~~.

Separator: see Cage.

Side Runout, Inner Ring (Test): Mount bearing on arbor having a very slight taper (0.0001 to 0.0002 in. on diameter per inch of length). Apply indicator against side of inner ring. The side runout is the difference between the maximum and minimum reading when rotating the arbor one revolution.

Skew: Slant, twist, nonsymetrical, nonuniform distribution.

Smearing or Pickup: Removal of raceway, ~~or~~ ball or cage material ~~due~~ due to skidding contact and its redisposition at another point in the form of smear.

Spalling: Actual removal of material from raceway or rolling element surfaces in the form of flakes, resulting in cavities - fatigue related.

Split Ball Bearing: A ball bearing having either one or both rings split across the raceway so as to facilitate assembly.

ARTHUR S. IRWIN CO. INC.
Technology Consultants
Driftwood Center
Bemus Point, NY 14712

continued next page .....

Squareness of O.D./Bore with Face: The squareness (90° angle) of the face with the outside diameter/bore of a ring.

Staking: A method of retaining a bearing by displacing housing material over the chamfer.

Stains: Surface discoloration.

Standard: A physical or numerical limit which is used as a reference. (Plug gage = physical and a surface roughness limit = numerical).

Statistical: Of, relating to, or dealing with the collection and analytical interpretation of numerical data.

Superficial: Effecting only the surface of an object.

Surface Texture: Repetitive or random deviations from the nominal surface which form the pattern of the surface. Includes roughness, waviness, lay and flaws.

Tandem Duplex Mounting: Assembly of two or more ball bearings mounted so as to divide the thrust load.

Tarnish: A stain on the surface.

Temper: To soften hardened steel by reheating at a temperature below the hardening temperature.

Thrust Bearing: A ball or roller bearing with space between rings oriented perpendicular to the axis of rotation. It is primarily intended to carry thrust loads.

Used Bearing: A bearing that has seen service and has been subjected to operating loads.

~~Width: The distance from one face of inner ring to opposite face of outer ring.~~ ? mixed up with cross-corner dimension.

Width, Inner Ring: Dimension across the inner ring.

Width, Outer Ring: Dimension across the outer ring.

ARTHUR S. IRWIN CO. INC.
Technology Consultants
Driftwood Center
Demus Point, NY 14712

Phone (616) 755-3741 Telex 22-8436
2860 McCracken, P.O. Box 688
Muskegon, Michigan 49443

KAYDON
CORPORATION

June 3, 1983

Mr. Arthur S. Irwin
Arthur S. Irwin Company, Inc.
Driftwood
Bemus Point, NY 14712

Subject: Industry Coordination Meetings on NASA Contract NA53-23520

Dear Mr. Irwin:

Having now attended the concluding two sessions of subject meetings I offer the following comments, which may be regarded as the official position of KAYDON CORPORATION with respect to the Qualification and Procurement Specification as well as the Rework, Refurbishment, and Restoration Specification:

1. Despite the many differing opinions expressed, there was near-unanimous agreement on all important issues.

2. Assuming amendment as generally agreed the specificaions will be useful documents which should serve well their intended purpose. In answer to Martin Joseph's question, we would respond positively to RFQ's subject to the specifications.

3. Because of the importance of three amendments, I recite here my understanding of the essence of the general consensus:

   a. Recertification by Quality Audit by the original contractor is an acceptable alternate to testing to requalify a bearing manufacturer that has not made a particular bearing for four years or more.

   b. In Par. 7 of the Qualification and Procurement Specification, processes and inspections should also be approved by the prime contractor.

   c. To the RR&R specification should be added the requirement for specific engineering documentation of allowable modifications of the bearing at issue. Such documentation may be prepared by the prime contractor or by the RR&R manufacturer and shall be approved by the contracting agency.

FOLLOWING ARE OUR REGISTERED TRADEMARKS - YOUR ASSURANCE OF KAYDON QUALITY.
KAYDON Endura-Slim Lami-Seal Endurakote WireX
Reali-Slim Reali-Seal Lami-Shield Thin-Shell Bowser

KAYDON
CORPORATION

In accordance with your request I also attach herewith a copy of the Glossary marked up with our suggested revisions.

Art, it's been a pleasure and privilege working with you on this important project. Also, I believe Bill Derner should be commended for both his excellent editorial work as well as his masterful monitoring of the work sessions. And last, but not least, let's give a hearty "thanks" to Barb Metcalf for all her behind-the-scenes assistance in making everything run smoothly.

Sincerely,

KAYDON CORPORATION

Dick George

Richard F. George
Vice President Engineering

ss

cc: T. Bushar/K. Harestad/R. Laferriere
M. Hoard/P. VanGennep

Enclosures

APPENDIX A - GLOSSARY

AA - Finish: Arithmetic Average - a numerical value of surface finish obtained by measuring the vertical distance from the mean line of an irregular surface to the profile in the same manner as with RMS, adding these measurements and dividing by the number of measurements.

ABEC 1, ~~ABEC 3~~ Discontinued, ABEC 5, ABEC 7, ABEC 9: Annular Bearing Engineers Committee (AFBMA) designations indicating degrees of ball bearing precision.

Absolute Filters: Filters capable of filtering out given size particles with near 100% efficiency.

Active Surfaces: ~~The contact areas on the rings and rolling elements that are generated as the bearing is rotated.~~ Those areas on the rings, rolling elements, and cage that engage another surface in rolling or sliding motion as the bearing rotate

AFBMA: Anti-Friction Bearing Manufacturers Association

Angular-Contact Bearing: A type of ball bearing whose internal clearances and ball raceway locations are such as to result in a definite contact angle and predetermined relationship of inner to outer ring faces.

ANSI: Americal National Standards Institute

Antifriction Bearing: A bearing using rolling elements such as balls or rollers ~~or needles.~~

AQL: Acceptable Quality Level is a value specified for a type or group of defects characteristics of an item or product. The specified AQL value (example - AQL of 0.4) is referred to in the appropriate sampling plan table of MIL STD 105. The number of defects for each AQL is then obtained that will determine whether to accept or reject the lot.

Axial Clearance: see End Play

Axial Load (Thrust): Pressure applied to the bearing parallel to the bearing axis.

Back-to-Back Assembly: A duplex pair of matched angular contact ball bearings ~~with outer ring backs adjacent.~~ whose lines joining the ball/raceway points of contact intersect outside of the bearing.

Ball Complement: Size and number of balls used in a ball bearing.

Bearing Axis: The imaginary center line about which the outer or inner ring will turn.

Bearing Stack: Matched multiple assembly of two or more bearings.

ARTHUR S. IRWIN CO. INC.
Technology Consultants
Driftwood Center
Bemus Point, NY 14712

continued next page .....

Bore Diameter: Inside diameter of inner ring.

Bore, Inner Ring: Surface area of bore diameter.

Bore, Outer Ring: Inner diameter surface or land area.

Boundary Dimensions: Dimensions for bore, outside diameter, width and corner(s).

Burnish: A luster or polish on a surface caused by friction or rubbing contact.

Cage (retainer, separator): A device, partially surrounding the rolling elements and traveling with them, with the ~~main~~ purposes of spacing the rolling elements in proper relationship to each other, and preventing the rolling elements from abrading each other.

Centrifugal: Moving or acting in a direction away from a center or axis.

Clearance, Axial: see End Play

Clearance, Radial: Radial internal clearance is the total diametrical movement of the unclamped ring when the specified load is reversed.

Cone: The inner ring of a tapered roller bearing.

Contact Angle: Angle between plane perpendicular to bearing axis and line drawn between centers of contact of balls to inner and outer ring raceways.

Convex: A surface that is curved or bulged outward in the center.

Corrosion: A process which destroys the metal by chemical or electrochemical action and converts it to an oxide, hydroxide, or sulfate compound.

Crack: A break, fracture, fissure, crevice or separation in the structure of the part.

Critical Defect: A defect that judgment and experience indicate is likely to result in hazardous or unsafe conditions for individuals using, maintaining, or depending upon the product; or a defect that judgment and experience indicate is likely to prevent performance of the tactical function of a major end item such as an aircraft, missile or space vehicle.

Crowned Roller: Having a very large radius profile on both sides of a straight cylindrical center section to provide a modified line contact with the raceways.

Defect: (discrepancy) Any deviation of a part from specified requirements.

continued next page .....

Diametral Clearance: see Clearance, Radial

Dimensional Stability: The degree of stability that hardened steel may have to resist growth or permanent expansion (a function of the amount of retained austenite.)

Duplex Bearing: Matched set of two preloaded bearings.

Dynamic Balance: That condition in a rotating body where the mass axis are coincident or the same.

Eccentricity (radial runout): Occurs when the center of one circular surface is not coincident (the same) as the center of another surface. Ex: Nonuniform thickness between the bore and the ball groove of an inner ring.

End Play (Test): The bearing is to be lubricated with light oil and one of its rings clamped to prevent axial movement, the specified reversing measuring load is applied to the unclamped ring so that resultant movement of that ring is parallel to the bearing axis, the end play is the total movement of the unclamped ring when the load is applied first in one direction and then the other.

Flaking: A condition of advanced fatigue where small pieces of metal are loosened from the base material.

Fluting: A form of pitting in which pits occur in a regular pattern so as to form transverse grooves or flutes in the raceway.

Fretting (fret wear, fretting corrosion, false brinelling): The rapid abrasion that occurs at the interface between contacting, highly loaded metal surfaces when subjected to vibratory motions or low amplitude. Usually accompanied by the formation of oxides of the abraded metal.

Galling: The transfer of material from one surface to another during sliding contact.

Groove Runout with Reference Side, Inner ring: see Raceway Runout with Reference Side, Inner Ring

Groove Runout with Reference Side, Outer Ring: see Raceway Runout with Reference Side, Outer Ring

Hardness: Resistance of metal to plastically deform, determined by indentation.

Height of Raceway Shoulder: Vertical distance from bottom of raceway

continued next page .....

to inner ring outer diameter or outer ring diameter (same as race depth).

Inclusion: A void, discontinuity, or solid foreign particle in the molecular structure of metal.

Inner Race: Raceway of inner ring

Inner Ring: The inner component of a bearing.

Inside Diameter: Dimension across center of ring bore. May be used to express dimension across bore of snap ring, shield, seal, etc.

Inspection: The process of measuring, exemining, testing, or otherwise comparing the unit or product (bearing) with the requirement.

Inspection, Quality Conformance (CQI): All examinations and tests performed for the purpose of determining conformance with specified requirements.

Inspection, 100%: An inspection in which Specified characteristics of each bearing are examined or tested to determine conformance with requirements.

Internal Clearance: see Clearance, Radial

Lands: The flat surfaces on both sides of the raceway or rings.

Land Riding Retainer: A retainer guided by either the inner ring or outer ring.

Laps: Discontinuities or irregularities in the material as a result of working.

Lay: Direction of the predominant surface pattern.

Loading Groove (filling slot): Notch in raceway to permit assembly of a maximum number of rolling elements.

Loading Groove Bearing: A bearing of maximum capacity type, in which there is introduced, by means of a filling slot or loading groove, more balls or rollers that can be incorporated in a non-filling slot or Conrad-type bearing.

Lot: This term shall mean "Inspection Lot", a collection of bearings or kits from which a sample is to be drawn and inspected to determine conformance with the acceptability criteria.

Lot Size: The lot size is the number of bearings in a lot.

Major Defect: A defect other than critical, that is likely to result in failure, or to materially reduce the usability of the product for its in-

tended purpose.

Martensite: A phase of steel with a body-centered crystalline structure characterized by a needle like microstructure.

Matching: Inner and outer rings in duplex sets that are matched for bore, O.D., and eccentricity, within specified tolerances.

Micron: One millionth of a meter; 1 micron equals .00003937 inches.

Minor Defect: A defect that is not likely to materially reduce the usability of the bearing for its intended purpose, or is a departure from established standards having minimal bearing on the effective use or operation of the unit.

Nominal: Approximate or rated value.

Outside Diameter Squareness with Side (Test): One side of the outer ring is supported on a flat plate of suitable dimensions (with inner ring free) and held against a stop located close to the lower corner of the outside diameter. The indicator is applied directly above the stop close to the upper corner of the outside diameter. The deviation from the outside diameter squareness with side is the difference between the minimum and maximum reading of the indicator when rotating the outer ring one revolution.

Parallelism of Sides: The difference between the largest and smallest width of the bearing rings.

Particulate: Existing in the form of very small separate particles.

Periphery: The external boundary or surface of a body.

Pitch Diameter, Rolling Elements: The diameter of the center line of the rolling elements.

Pitting: Minute removal of raceway of ball surfaces through fatigue, corrosion or electrical arcing.

Plastic Flow: Deformation that permanently remains after removing the load which caused it.

Pocket, Cage: That portion of cage which is shaped to receive the rolling element.

Precision: The degree of agreement of repeated measurements of a quantity. Compare with accuracy.

continued next page .....

Preload: Thrust loading a bearing in a unit to increase rigidity. Preloading decreases deformation and deflection by absorbing the initial portion of the deflection curve which is steep and increasing at a high rate. The result is that the deflection is more uniform and has less magnitude throughout the loading range.

Processed Bearing: A bearing that has been used and then cleaned, inspected, gaged, tested and preserved for additional use.

Profile: The contour (external outline) of a surface in a plane perpendicular (right angle) to the surface.

Profile (measured): A representation of the profile abtained by instrumental means.

QCL: Quality Characteristics List

Race: see Ring

Raceway: The contact path of the rolling element on rings of rolling bearing.

Raceway Diameter: Diameter of the inner or outer ring raceway of a bearing.

Raceway, Inner Ring: Track or groove for rolling elements in the inner ring.

Raceway, Outer Ring: Track or groove for rolling elements in the outer ring.

Raceway Runout with Reference Side, Inner Ring (Test): Mount bearing on arbor having a very slight taper (preferably 0.0001 to 0.0002 in. on the diameter per inch of length). Support outer ring in horizontal position and apply indicator to side of inner ring. The deviation from groove parallelism with side is the difference between the maximum and minimum reading when rotating the arbor one revolution.

Raceway Runout with Reference Side, Outer Ring (Test): Mount bearing on arbor having a very slight taper (preferably 0.0001 to 0.0002 in. on the diameter per inch of length). Apply a true running weight to the outer ring. Support arbor in a vertical position and apply indicator to side of outer ring. The deviation from groove parallelism with side is the difference between the maximum and minimum reading when rotating outer ring one revolution.

Radial Clearance: see Clearance, Radial

continued next page .....

Radial Load: Pressure applied to the inner or outer rings perpendicular to the bearing axis.

Radial Runout (Test): Mount bearing on arbor having a very slight taper (0.0001 to 0.0002 in. on diameter per inch of length). Apply indicator on center of stationary outer ring. The radial runout is the difference between the minimum and maximum reading when rotating the arbor one revolution. Corrections should be made for the inaccuracy of the arbor.

Radial Type Bearing: A rolling bearing primarily designed to support a radial load perpendicular to shaft axis.

Random Sampling: Plan for choosing sample units in a random or nonregular pattern for quality inspection.

Rating Life (L_{10}): Number of hours at a given speed that 90% of a group of identical bearings will atain or exceed before the first indication of fatigue cracking or spalling.

RBEC 1, RBEC 5: Designations indicating degrees of roller bearing precision. Roller Bearing Engineers Committee (AFBMA)

Refinish: To restore an existing surface finish without removing all the existing finish.

Refurbish: To repair bearings by replacement or worn and/or defective parts and resurfacing any surface including raceways.

Restoration: To return a bearing to original assembly print dimensions by regrinding raceways and rebuilding with oversize rolling elements.

Retained Austenite: Unconverted austenite phase remaining in steel after heat treating to obtain the harder, more fatigue resistant martensitic steel.

Retainer: see Cage

Rework: The overall procedure for cleaning, reworking, refurbishing, restoring and reissuing of used or rejected bearings.

RFI: Ready for issue.

Rockwell Hardness Test: A test for determining the hardness of a material based on the depth of penetration of a specified penetrator into the specimen under specified load conditions.

Roller: Load-carrying rolling element.

continued next page .....

Roller Assembly: Rollers and cage.

Roller Complement: Size and number of rollers in a bearing.

Roller Diameter: Maximum circular dimensions of straight rollers.

Roller Length: Distance between the ends or faces of the roller.

Rolling Bearing: A bearing using rolling elements such as balls, rollers, or needles to reduce friction and to support load.

Runout: The amount that one surface lacks of being true with another surface of the same part.

Runout, Radial: see Radial Runout

Sample: A sample consists of one or more parts drawn from a lot, the parts being selected at random without regard to their quality.

Sampling Plan: A sampling plan indicates the number of bearings from each lot which are to be inspected and the criteria for determining the acceptability of the lot.

Scratches: Linear abrasions on the surface.

Scuffs: A series of small superficial or shallow scratches.

Separable: A bearing assembly that may be separated completely or partially into its component parts.

Separator: see Cage.

Side Runout, Inner Ring (Test): Mount bearing on arbor having a very slight taper (0.0001 to 0.0002 in. on diameter per inch of length). Apply indicator against side of inner ring. The side runout is the difference between the maximum and minimum reading when rotating the arbor one revolution.

Skew: Slant, twist, nonsymetrical, nonuniform distribution.

Smearing or Pickup: Removal of raceway or ball material die to skidding contact and its redisposition at another point in the form of smear.

Spalling: Actual removal of material from raceway or rolling element surfaces in the form of flakes, resulting in cavities - fatigue related.

Split Ball Bearing: A ball bearing having either one or both rings split across the raceway so as to facilitate assembly.

continued next page .....

Squareness of O.D./Bore with Face: The squareness (90° angle) of the face with the outside diameter/bore of a ring.

Staking: A method of retaining a bearing by displacing housing material over the chamfer.

Stains: Surface discoloration.

Standard: A physical or numerical limit which is used as a reference. (Plug gage = physical and a surface roughness limit = numerical).

Statistical: Of, relating to, or dealing with the collection and analytical interpretation of numerical data.

Superficial: Affecting only the surface of an object.

Surface Texture: Repetitive or random deviations from the nominal surface which form the pattern of the surface. Includes roughness, waviness, lay and flaws.

Tandem Duplex Mounting: Assembly of two or more ball bearings mounted so as to divide the thrust load.

Tarnish: A stain on the surface.

Temper: To soften hardened steel by reheating at a temperature below the hardening temperature.

Thrust Bearing: A ball or roller bearing with space between rings oriented perpendicular to the axis of rotation. It is primarily intended to carry thrust loads.

Used Bearing: A bearing that has seen service and has been subjected to operating loads.

Width: The distance from one face of inner ring to opposite face of outer ring.

Width, Inner Ring: Dimension across the inner ring.

Width, Outer Ring: Dimension across the outer ring.

ARTHUR S. IRWIN CO. INC.
Technology Consultants
Driftwood Center
Bemus Point, NY 14712

From: Bill Poole

To: Art Irwin Date: 6/4/83

I made a few suggested changes to the glossary. Also included is a copy of the EEW paper.

The subscription form for "Fine Homebuilding" is for Barbara.

Best regards,

Bill

PRATT & WHITNEY AIRCRAFT GROUP
Government Products Division

UNITED TECHNOLOGIES.

PWA 11136

ORIGINAL PAGE IS
OF POOR QUALITY

APPENDIX A - GLOSSARY

AA - Finish: Arithmetic Average - a numerical value of surface finish obtained by measuring the vertical distance from the mean line of an irregular surface to the profile in the same manner as with RMS, adding these measurements and dividing by the number of measurements.

ABEC 1, ~~ABEC 3,~~ ABEC 5, ABEC 7, ABEC 9: Annular Bearing Engineers Committee (AFBMA) designations indicating degrees of ball bearing precision.

~~Absolute Filters: Filters capable of filtering out given size particles with near 100% efficiency.~~

Active Surfaces: The contact areas on the rings and rolling elements that are generated as the bearing is rotated.

AFBMA: Anti-Friction Bearing Manufacturers Association

Angular-Contact Bearing: A type of ball bearing whose internal clearances and ball raceway locations are such as to result in a definite contact angle and predetermined relationship of inner to outer ring faces when axially loa

ANSI: Americal National Standards Institute

Antifriction Bearing: A bearing using rolling elements such as balls, rollers or needles.

AQL: Acceptable Quality Level is a value specified for a type or group of defects characteristics of an item or product. The specified AQL value (example - AQL of 0.4) is referred to in the appropriate sampling plan table of MIL STD 105. The number of defects for each AQL is then obtained that will determine whether to accept or reject the lot.

Axial Clearance: see End Play.

Axial Load (Thrust): Pressure applied to the bearing parallel to the bearing axis.

Back-to-Back Assembly: A duplex pair of matched ball bearings with outer ring backs adjacent.

Ball Complement: Size and number of balls used in a ball bearing.

Bearing Axis: The imaginary center line about which the outer or inner ring will turn.

Bearing Stack: Matched multiple assembly of two or more bearings.

ARTHUR S. IRWIN CO. INC.
Technology Consultants
Driftwood Center
Bemus Point, NY 14712

continued next page .....

Bore Diameter: Inside diameter of inner ring.

~~Bore, Inner Ring: Surface area of bore diameter.~~

Bore, Outer Ring: Inner diameter surface or land area.

Boundary Dimensions: Dimensions for bore, outside diameter, width and corner(s).

~~Burnish: A luster or polish on a surface by friction or rubbing contact.~~

Cage (retainer, separator): A device, partially surrounding the rolling elements and traveling with them, with themain purpose of spacing the rolling elements in proper relationship to each other.

Centrifugal: Moving or acting in a direction away from a center or axis.

Clearance, Axial: see End Play

Clearance, Radial: Radial internal clearance is the total diametrical movement of the unclamped ring when the specified load is reversed.

Cone: The inner ring of a tapered roller bearing.

Contact Angle: Angle between plane perpendicular to bearing axis and line drawn between centers of contact of balls to inner and outer ring raceways.

Convex: A surface that is curved or bulged outward in the center.

Corrosion: A process which destroys the metal by chemical or electrochemical action and converts it to an oxide, hydroxide, or sulfate compound.

Crack: A break, fracture, fissure, crevice or separation in the structure of the part.

Critical Defect: A defect that judgment and experience indicate is likely to result in hazardous or unsafe conditions for individuals using, maintaining, or depending upon the product; or a defect that judgment and experience indicate is likely to prevent performance of the tactical function of a major end item such as an aircraft, missile or space vehicle.

Crowned Roller: Having a very large radius profile on both sides of a straight cylindrical center section to provide a modified line contact with the raceways.

Defect: (discrepancy) Any deviation of a part from specified requirements.

continued next page .....

Diametral Clearance: see Clearance, Radial

Dimensional Stability: The degree of stability that hardened steel may have to resist growth or permanent expansion (a function of the amount of retained austenite.)

Duplex Bearing: Matched set of two preloaded bearings.

Dynamic Balance: That condition in a rotating body where the mass axis are coincident or the same.

Eccentricity (radial runout): Occurs when the center of one circular surface is not coincident (the same) as the center of another surface. Ex: Nonuniform thickness between the bore and the ball groove of an inner ring.

End Play (Test): The bearing is to be lubricated with light oil and one of its rings clamped to prevent axial movement, the specified reversing measuring load is applied to the unclamped ring so that resultant movement of that ring is parallel to the bearing axis, the end play is the total movement of the unclamped ring when the load is applied first in one direction and then the other.

Flaking: A condition of advanced fatigue where small pieces of metal are loosened from the base material.

Fluting: A form of pitting in which pits occur in a regular pattern so as to form transverse grooves or flutes in the raceway.

Fretting (fret wear, fretting corrosion, false brinelling): The rapid abrasion that occurs at the interface between contacting, highly loaded metal surfaces when subjected to vibratory motions or low amplitude. Usually accompanied by the formation of oxides of the abraded metal.

Galling: The transfer of material from one surface to another during sliding contact.

Groove Runout with Reference Side, Inner ring: see Raceway Runout with Reference Side, Inner Ring

Groove Runout with Reference Side, Outer Ring: see Raceway Runout with Reference Side, Outer Ring

Hardness: Resistance of metal to plastically deform, determined by indentation.

Height of Raceway Shoulder: Vertical distance from bottom of raceway

continued next page .....

to inner ring outer diameter or outer ring diameter (same as race depth).

Inclusion: A void, discontinuity, or solid foreign particle in the molecular structure of metal.

Inner Race: Raceway of inner ring

Inner Ring: The inner component of a bearing.

Inside Diameter: Dimension across center of ring bore. May be used to express dimension across bore of snap ring, shield, seal, etc.

Inspection: The process of measuring, examining, testing, or otherwise comparing the unit or product (bearing) with the requirement.

Inspection, Quality Conformance (CQI): All examinations and tests performed for the purpose of determining conformance with specified requirements.

Inspection, 100%: An inspection in which Specified characteristics of each bearing are examined or tested to determine conformance with requirements.

Internal Clearance: see Clearance, Radial

Lands: The flat surfaces on both sides of the raceway or rings.

Land Riding Retainer: A retainer guided by either the inner ring or outer ring.

Laps: Discontinuities or irregularities in the material as a result of working.

Lay: Direction of the predominant surface pattern.

Loading Groove (filling slot): Notch in raceway to permit assembly of a maximum number of rolling elements.

Loading Groove Bearing: A bearing of maximum capacity type, in which there is introduced, by means of a filling slot or loading groove, more balls or rollers that can be incorporated in a non-filling slot or Conrad-type bearing.

Lot: This term shall mean "Inspection Lot", a collection of bearings or kits from which a sample is to be drawn and inspected to determine conformance with the acceptability criteria.

Lot Size: The lot size is the number of bearings in a lot.

Major Defect: A defect other than critical, that is likely to result in failure, or to materially reduce the usability of the product for its in-

tended purpose.

Martensite: A phase of steel with a body-centered crystalline structure characterized by a needle like microstructure.

Matching: Inner and outer rings in duplex sets that are matched for bore, O.D., and eccentricity, within specified tolerances.

Micron: One millionth of a meter, 1 micron equals .00003937 inches.

Minor Defect: A defect that is not likely to materially reduce the usability of the bearing for its intended purpose, or is a departure from established standards having minimal bearing on the effective use or operation of the unit.

Nominal: Approximate or rated value.

Outside Diameter Squareness with Side (Test): One side of the outer ring is supported on a flat plate of suitable dimensions (with inner ring free) and held against a stop located close to the lower corner of the outside diameter. The indicator is applied directly above the stop close to the upper corner of the outside diameter. The deviation from the outside diameter squareness with side is the difference between the minimum and maximum reading of the indicator when rotating the outer ring one revolution.

Parallelism of Sides: The difference between the largest and smallest width of the bearing rings.

~~Particulate: Existing in the form of very small separate particles.~~

~~Periphery: The external boundary or surface of a body.~~

Pitch Diameter, Rolling Elements: The diameter of the center line of the rolling elements.

Pitting: Minute removal of raceway of ball surfaces through fatigue, corrosion or electrical arcing.

Plastic Flow: Deformation that permanently remains after removing the load which caused it.

Pocket, Cage: That portion of cage which is shaped to receive the rolling element.

Precision: The degree of agreement of repeated measurements of a quantity. Compare with accuracy.

ARTHUR S. IRWIN CO. INC.
Technology Consultants
Driftwood Center
Bemus Point, NY 14712

continued next page .....

Preload: Thrust loading a bearing in a unit to increase rigidity. Preloading decreases deformation and deflection by absorbing the initial portion of the deflection curve which is steep and increasing at a high rate. The result is that the deflection is more uniform and has less magnitude throughout the loading range.

Processed Bearing: A bearing that has been used and then cleaned, inspected, gaged, tested and preserved for additional use.

Profile: The contour (external outline) of a surface in a plane perpendicular (right angle) to the surface.

Profile (measured): A representation of the profile abtained by instrumental means.

QCL: Quality Characteristics List

Race: see Ring

Raceway: The contact path of the rolling element on rings of rolling bearing.

Raceway Diameter: Diameter of the inner or outer ring raceway of a bearing.

Raceway, Inner Ring: Track or groove for rolling elements in the inner ring.

Raceway, Outer Ring: Track or groove for rolling elements in the outer ring.

Raceway Runout with Reference Side, Inner Ring (Test): Mount bearing on arbor having a very slight taper (preferably 0.0001 to 0.0002 in. on the diameter per inch of length). Support outer ring in horizontal position and apply indicator to side of inner ring. The deviation from groove parallelism with side is the difference between the maximum and minimum reading when rotating the arbor one revolution.

Raceway Runout with Reference Side, Outer Ring (Test): Mount bearing on arbor having a very slight taper (preferably 0.0001 to 0.0002 in. on the diameter per inch of length). Apply a true running weight to the outer ring. Support arbor in a vertical position and apply indicator to side of outer ring. The deviation from groove parallelism with side is the difference between the maximum and minimum reading when rotating outer ring one revolution.

Radial Clearance: see Clearance, Radial

continued next page .....

Radial Load: Pressure applied to the inner or outer rings perpendicular to the bearing axis.

Radial Runout (Test): Mount bearing on arbor having a very slight taper (0.0001 to 0.0002 in. on diameter per inch of length). Apply indicator on center of stationary outer ring. The radial runout is the difference between the minimum and maximum reading when rotating the arbor one revolution. Corrections should be made for the inaccuracy of the arbor.

Radial Type Bearing: A rolling bearing primarily designed to support a radial load perpendicular to shaft axis.

Random Sampling: Plan for choosing sample units in a random or nonregular pattern for quality inspection.

Rating Life (L_{10}): Number of hours at a given speed that 90% of a group of identical bearings will atain or exceed before the first indication of fatigue cracking or spalling.

RBEC 1, RBEC 5: Designations indicating degrees of roller bearing precision. Roller Bearing Engineers Committee (AFBMA)

Refinish: To restore an existing surface finish without removing all the existing finish.

Refurbish: To repair bearings by replacement or worn and/or defective parts and resurfacing any surface including raceways.

Restoration: To return a bearing to original assembly print dimensions by regrinding raceways and rebuilding with oversize rolling elements.

Retained Austenite: Unconverted austenite phase remaining in steel after heat treating to obtain the harder, more fatigue resistant martensitic steel.

Retainer: see Cage

Rework: The overall procedure for cleaning, reworking, refurbishing, restoring and reissuing of used or rejected bearings.

RFI: Ready for issue.

Rockwell Hardness Test: A test for determining the hardness of a material based on the depth of penetration of a specified penetrator into the specimen under specified load conditions.

Roller: Load-carrying rolling element. May be cylindrical, tapered or barrel shaped.

ARTHUR S. IRWIN CO. INC.
Technology Consultants
Driftwood Center
Semus Point, NY 14712

continued next page .....

Roller Assembly: Rollers and cage.

Roller Complement: Size and number of rollers in a bearing.

Roller Diameter: Maximum circular dimensions of straight rollers.

Roller Length: Distance between the ends or faces of the roller.

Rolling Bearing: A bearing using rolling elements such as balls, rollers, or needles to reduce friction and to support load.

Runout: The amount that one surface lacks of being true with another surface of the same part.

Runout, Radial: see Radial Runout

Sample: A sample consists of one or more parts drawn from a lot, the parts being selected at random without regard to their quality.

Sampling Plan: A sampling plan indicates the number of bearings from each lot which are to be inspected and the criteria for determining the acceptability of the lot.

Scratches: Linear abrasions on the surface.

Scuffs: A series of small superficial or shallow scratches.

Separable: A bearing assembly that may be separated completely or partially into its component parts.

Separator: see Cage.

Side Runout, Inner Ring (Test): Mount bearing on arbor having a very slight taper (0.0001 to 0.0002 in. on diameter per inch of length). Apply indicator against side of inner ring. The side runout is the difference between the maximum and minimum reading when rotating the arbor one revolution.

Skew: Slant, twist, nonsymetrical, nonuniform distribution.

Smearing or Pickup: Removal of raceway or ball material die to skidding contact and its redisposition at another point in the form of smear.

Spalling: Actual removal of material from raceway or rolling element surfaces in the form of flakes, resulting in cavities - fatigue related.

Split Ball Bearing: A ball bearing having either one or both rings split across the raceway so as to facilitate assembly.

ARTHUR S. IRWIN CO. INC.
Technology Consultants
Driftwood Center
Bemus Point, NY 14712

continued next page .....

ORIGINAL PAGE IS
OF POOR QUALITY

Squareness of O.D./Bore with Face: The squareness (90° angle) of the face with the outside diameter/bore of a ring.

Staking: A method of retaining a bearing by displacing housing material over the chamfer.

Stains: Surface discoloration.

Standard: A physical or numerical limit which is used as a reference. (Plug gage = physical and a surface roughness limit = numerical).

Statistical: Of, relating to, or dealing with the collection and analytical interpretation of numerical data.

Superficial: Effecting only the surface of an object.

Surface Texture: Repetitive or random deviations from the nominal surface which form the pattern of the surface. Includes roughness, waviness, lay and flaws.

Tandem Duplex Mounting: Assembly of two or more ball bearings mounted so as to ~~divide~~ share the thrust load.

Tarnish: A stain on the surface.

Temper: To soften hardened steel by reheating at a temperature below the hardening temperature.

Thrust Bearing: A ball or roller bearing with space between rings oriented perpendicular to the axis of rotation. It is primarily intended to carry thrust loads.

Used Bearing: A bearing that has seen service and has been subjected to operating loads.

Width: The distance from one face of inner ring to opposite face of outer ring.

Width, Inner Ring: Dimension across the inner ring.

Width, Outer Ring: Dimension across the outer ring.

ARTHUR S. IRWIN CO. INC.
Technology Consultants
Driftwood Center
Bemus Point, NY 14712

PRATT & WHITNEY AIRCRAFT GROUP

East Hartford, Connecticut 06108

September 21, 1983

Arthur S. Irwin Co., Inc.
Driftwood
Bemus Point, New York 14712

Attention: Mr. Arthur S. Irwin

Subject: Bearing Specifications -

- Ball and Cylindrical Roller Bearing Spec., Dated 8/10/83
- Rework, Refurbishment Spec., Dated 8/5/83

Reference: Letter, Arthur S. Irwin Co. to Bill Ironside, August 24, 1983

The revised bearing specifications have been reviewed. Since the specifications are being drafted for the U.S. Army, our Florida Operations (Government Products Division) will provide a consolidated P&WA response to the documents. If clarification or additional information is required, please feel free to contact us.

Sincerely,

PRATT & WHITNEY AIRCRAFT GROUP
Connecticut Operations

W. R. Ironside

W. R. Ironside

mb

UNITED TECHNOLOGIES

ROLLWAY

Rollway Bearing Division 315·457-6211
P.O. Box 4827 Telex: 93-7265
Syracuse, New York 13221

September 7, 1983

Arthur S. Irwin Co., Inc.
Driftwood
Bemus Point, N.Y. 13712

Attention: Mr. Arthur S. Irwin

Reference: Procurement and Rework Specifications

Dear Art:

We have reviewed the rework specification dated 5 August 1983 and the procurement specification dated 10 August 1983 and consider them adequate for defining the characteristics and controls necessary for Army procurement of replacement bearings including those salvaged by rework.

Very truly yours,

ROLLWAY BEARING

T. L. Morrissey
Manager
Engineering & Quality

TLM/rvg

DIVISION OF LIPE-ROLLWAY CORPORATION

MPB

Split Ballbearing
DIVISION OF MPB CORPORATION
HIGHWAY FOUR, LEBANON, NEW HAMPSHIRE 03766
TELEPHONE: 603-448-3000
TWX: 710-366-1661

November 3, 1983

Arthur S. Irwin Co., Inc.
Technology Consultants
Driftwood
Bemus Point, NY 14712

Attention: Mr. Arthur S. Irwin, President
ASICO Program Manager

Subject: Specification for Ball & Cylindrical Roller Bearings
Rework, Refurbishment and Restoration

Dear Mr. Irwin:

We have reviewed the subject specification and would note that we are primarily interested in the "Rework, Refurbishment and Restoration" portion at this time.

With the addition of the quality audit in Paragraph 3.1 (of both specifications) as an option in lieu of qualification testing, we feel that the documents are now in a form that will be workable at Split Ballbearing.

Yours truly,

Wm. J. Roos

Wm. J. Roos
Supervisor, Advance
Product Development

WJR/bt
cc: ALP

TRW BEARINGS DIVISION

June 6, 1983

Mr. Arthur S. Irwin, President
ASICO, Inc.
Driftwood
Bemus Point, New York 14712

Dear Mr. Irwin:

SUBJECT:
1. Specification for ball and cylindrical roller bearings
2. Rework, Refurbishment and Restoration of Aircraft Engine and Power Transmission cylindrical and ball bearings

In the opinion of TRW Bearings Division, the subject documents can serve the purpose of standardization of requirements for new aircraft bearings and for overhaul of used bearings, providing that changes are made consistent with comments presented at the Coordination meeting on June 1 & 2, 1983.

Very truly yours,

nmt/ Dan Lundquist

Dan Lundquist
Manager, Aircraft Engineering

/nmt

BEARINGS DIVISION OF TRW INC.
402 CHANDLER STREET JAMESTOWN, NEW YORK 14701
TELEPHONE (716) 661-2600 TELEX 91527

MRC BEARINGS

TRW *BEARINGS DIVISION*

September 15, 1983

Mr. Arthur S. Irwin
Driftwood
Bemus Point, N.Y. 14712

Subject: Specification for Ball and Roller Bearings
Rework, Refurbishment and Restoration

Ref: ASICO Letter 8/24/83

Dear Mr. Irwin:

The following comment applies to paragraph 8.1.17 of the proposed ball and roller bearing specification.

8.1.17 currently reads, "rolling element minimum clearance from the tang or retention device as in the operating condition, where applicable."

Proposed rewording is: "minimum clearance between rolling element and cage, to be measured with rolling element and cage positioned in a simulated operating position to produce the closest approach between rolling element and the cage retention feature."

The following comment applies to paragraph 10.5 of the refurbishment specification. To the best of our knowledge there is no statistical test evidence to suggest the existance of a finite endurance life for aircraft bearings. We submit that there should be no limit imposed on the number of times that a bearing could be refurbished. On the other hand, bearings should not be restored (re-ground) more than once since the use of oversized rolling elements will destroy the design relationships necessary for proper bearing functioning.

The following comment applies to paragraph 8 of the general ball and roller bearing specification. MIL-STD-880 is not listed as a current specification in the official register of government standards.

Very truly yours,

Dan Lundquist
Manager Aircraft Engineering

DL/fmr
cc: J.K. Bailey
C.H. Morse

BEARINGS DIVISION OF TRW INC.
402 CHANDLER STREET JAMESTOWN, NEW YORK 14701
TELEPHONE (716) 661-2600 TELEX 91527

MRC BEARINGS

APPENDIX E

TYPICAL DRAWINGS WITH DATA FORMATS

☆U.S.Government Printing Office: 1985 — 559-109/10436

ORIGINAL PAGE IS OF POOR QUALITY

ORIGINAL PAGE IS OF POOR QUALITY

ORIGINAL PAGE IS OF POOR QUALITY

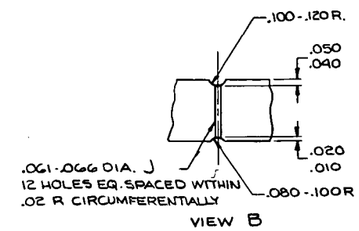

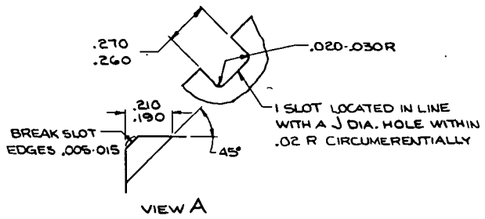

26 BALLS MUST BE RETAINED IN RETAINER WHEN REMOVED FROM RACES
25 SPECIAL HEAT TREAT REQUIRED TO INCLUDE DETAILS OF MICROSTRUCTURE AND RETAINED AUSTENITE REQUIREMENTS PER GE SPEC. _____
24 INNER RING HIGH POINT OF ECCENTRICITY TO BE IDENTIFIED
23 NITAL ETCH STAINS TO BE REMOVED
22 VENDOR SUBSTANTIATION REQUIRED
21 ▷ VENDOR IDENTIFICATION REQUIREMENTS

20 RETAINER FACES TO BE PARALLEL WITHIN (TOTAL)		.002
19 RETAINER FACE TO BEARING FACE CLEARANCE		.005
18 LOBING, WAVINESS, & CHATTER TOLERANCES OF BEARING BORE & O.D.		
17 PILOT RING LOCATING DIAM. CONCENTRICITY		.002
16 RETAINER LAND WIDTH (MIN EFF)		
15 PITCH DIAMETER		3.228
14 CROSS CORNER DIMENSION W/ END PLAY REMOVED		N/A
13 BEARING MATERIALS STABILIZED TO OPERATE AT -65 TO +800 F.		
12 SURFACE ROUGHNESS (AA)	RING PILOT SURFACE	12
	RETAINER POCKET	
	RETAINER PILOT SURFACE	
	BEARING O.D.	
	BEARING BORE	
	INNER RACE	4
	OUTER RACE	4
	ROLLING ELEMENT	2
11 RETAINER (DIMENSIONS & ENGINEERING REQUIREMENTS ARE AFTER PLATING)	MATERIAL SPECIFICATION	AMS 6414
	HARDNESS	28-32
	PLATING SPECIFICATION	AMS 2412
	PLATING THICKNESS	.001/.002
	TYPE OF RETENTION	MACHINED-IN TANG
10 ROLLING ELEMENT & RING MATERIAL	HARDNESS R_c	60-64
	SPECIFICATION GE	B50TF 103 CLA
9 ROLLING ELEMENT TO RETAINER POCKET CLRANCE		.015/.021
8 RETAINER BORE TO O.D. CONCENTRICITY		.002
7 RETAINER WIDTH, MAX.		.763/.771
6 RETAINER PILOT CLEARANCE, DIAMETRAL		.013/.017
5 RADIAL CLEARANCE UNDER 11 LB. GAGE LOAD		.0038/.0046
4 NUMBER OF ROLLING ELEMENTS PER ROW		15
3 SIZE OF ROLLING ELEMENTS		.5625
2 AFBMA CLASS		7

1 THIS BEARING MUST CONFORM TO THE PREMIUM AIRCRAFT QUALITY REQUIREMENTS OF GE SPEC: M50TF5 CL-A (BEARINGS) ABEC 7 UNLESS OTHERWISE SPECIFIED

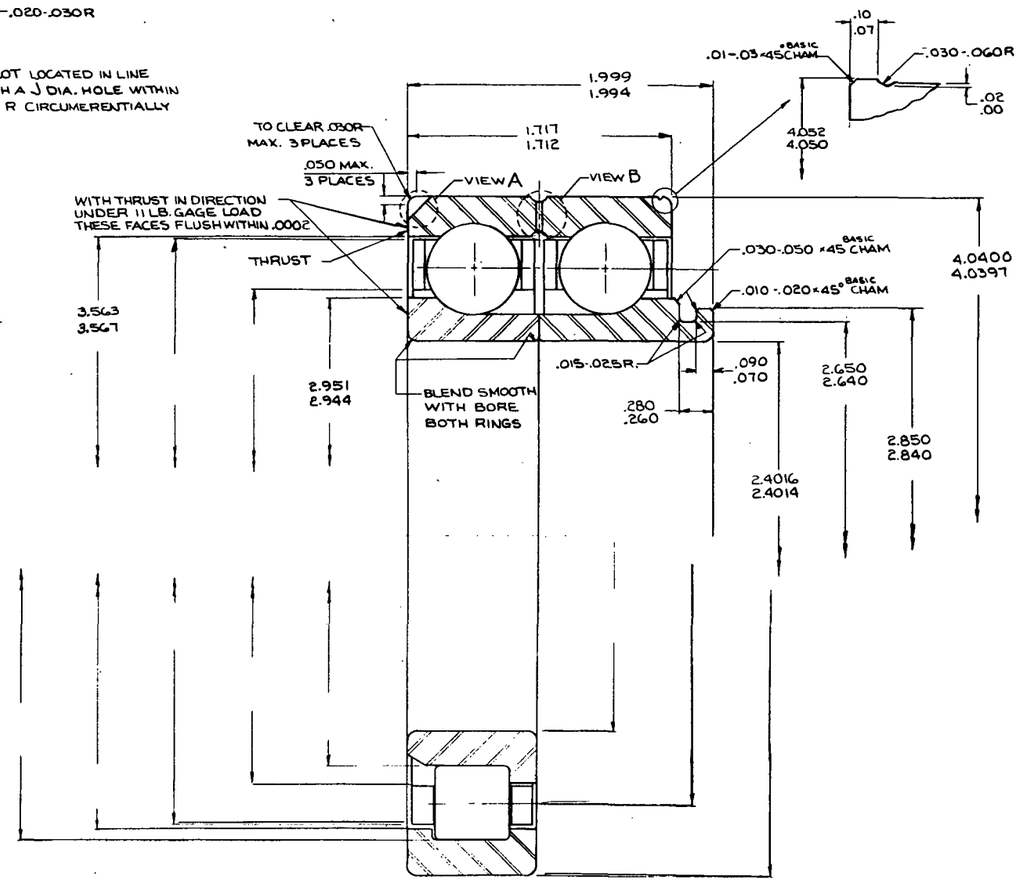

11 CAGE UNBALANCE AT 500 RPM NOT TO EXCEED 3 GM-CM. NO ALTERATIONS ALLOWED FOR BALANCING

10 INNER RING O.D. RUNOUT WHEN O.D IS USED AS REF		.001
9 RING GRAIN ORIENTATION TO BE SUBSTANTIALLY PARALLEL TO GROOVE SURFACES PER SPEC: GE _____		
8 RUNOUT OF SPLIT RING CONTACT FACE WITH RESPECT TO BORE OF SPLIT RING		.0001
7 END PLAY UNDER 11 LB GAGE LOAD		.0034/.0037
6 CONTACT ANGLE UNDER 22 LB. GAGE LOAD		22°30'/21°30'
5 SHIM THICKNESS FOR SPLIT RINGS		NA
4 MAX. STEP AT SPLIT (SPLIT RINGS)		NA
3 SHIM ANGLE		NA
2 RACE GROOVE DEPTH % OF BALL DIAMETER	OUTER	20
	INNER	25
1 RACE GROOVE CURVATURE % OF BALL DIAMETER	OUTER	.5175/.5225
	INNER	.5175/.5225

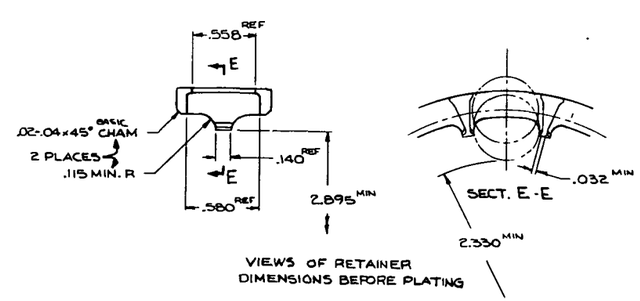

VIEWS OF RETAINER DIMENSIONS BEFORE PLATING

19 ROLLER POCKET LOCATED IN RETAINER WITHIN DIA. OF TRUE POSITION	
18 ROLLER COMPLIMENT TO BE RETAINED IN RETAINER WHEN REMOVED FROM ITS ASSOCIATED RING	
17 MIN. CLRANCE - ROLLER TO RETAINER RETENTION	
16 ROLLER DROP (ROLLER CENTERED IN RETAINER	
15 END FLOAT	
14 ROLLER LENGTH & DIAMETER VARIATION PER BRG.	
13 CAGE UNBANCE AT R.P.M.	
12 ROLLER END FACE FINISH	
11 ROLLER CORNER RADIUS	
10 FLANGE LAYBACK ANGLE	
9 FLANGE HEIGHT	
8 ROLLER TO FLANGE END CLEARANCE	
7 ROLLER CORNER RADIUS RUNOUT WITH RESPECT TO ROLLER CYLINDRICAL SECTION	
6 ROLLER END SQUARENESS	
5 ROLLET FLAT CENTRALITY	
4 ROLLER FLAT LENGTH	
3 ROLLER CROWN DROP	
2 ROLLER CROWN RADIUS	
1 ROLLER ROUNDNESS	

BEARING

SCALE —	APPROVED BY	DRAWN BY Bloom
DATE 11-2-83		REVISED 9 SEP 80
BEARING, BALL, ANNULAR Nº 1		
5034T07	SHEET 1	DRAWING NUMBER

FOLDOUT FRAME

PRECEDING PAGE BLANK NOT FILMED

2 FOLDOUT FRAME

APPLICATION NUMBER	1	2	3	4
NEXT ASS'Y DRWG NO.				
OPERATING SPECTRUM:				
FLIGHT CONDITION				
% TIME				
MEAN — BEARING SPEED - RPM	20,700			
MEAN — LOAD - AXIAL - LBS.	985			
MEAN — RADIAL - LBS.	30			
TEMPERATURES:				
INNER RACE & ADJACENT MATING FACES	240			
OUTER RACE & ADJACENT MATING FACES	230			
ROLLING ELEMENTS	248			
LUBRICANT - OIL-IN	210			
OIL-OUT				
BEARING RADIAL CL'RANCE AT OPERATING TEMP.				

BASIC BEARING DATA:	
BEARING RADIAL CL'RANCE AT ROOM TEMPERATURE	.0042
SHIM ANGLE (OR EQUIV.)	NA
SHIM THICKNESS (OR EQUIV) USED WHEN GRINDING SPLIT BALL BEARING RINGS	NA
RACE DEPTHS: (% BALL DIA.)	I: 25%; O: 20%
CAGE POCKET DETAIL DIMENSIONS:	
CIRCUMERENTIAL	.018
AXIAL	.018
RADIAL HEIGHT, MIN.	.197
CAGE GUIDING LAND CONTACT EFFECTIVE WIDTH	.106
PILOT DIAMETRAL CLEARANCE	.0145
CAGE WIDTH	.763 - .771
CAGE WEIGHT, LBS.	.238
CAGE TYPE	O.R.R.
CAGE LAND RIDING DIAMETER	3.563
PITCH DIAMETER	3.228
NO. OF ROLLING ELEMENTS	15
BALL DIAMETER	.5625
CONTACT ANGLE	25°30'
OUTER RACE CURVATURE	.52
INNER RACE CURVATURE	.52
SURFACE ROUGHNESS:	
OUTER RACE	4
INNER RACE	4
BALL	2

LUBRICANT DATA:	
MIL. STANDARD	MIL-L-7808
~~IF LUBRICANT IS NONSTAND THE FOLLOWING DATA IS REQUIRED~~	
~~PRESSURE VISCOSITY @ 100°F~~	
~~PRESSURE VISCOSITY @ 210°F~~	
~~DENSITY @ 60°F~~	
~~THERMAL CONDUCTIVITY~~	
~~THERMAL EXPANSION~~	

NOTES:

1. WHERE PRACTICAL, RETAINER SHALL BE DESIGNED TO PERMIT REMOVAL OF ROLLING ELEMENTS FROM THE RINGS WITHOUT CUTTING OR BENDING TANGS. THE ROLLING ELEMENTS SHALL BE RETAINED IN THE RETAINER BY A "SNAP-IN" CONFIGURATION.
2. ROLLING ELEMENTS SHALL BE HARDER THAN THE RINGS BY ONE OR TWO POINTS, ROCKWELL "C". (IF SPECIFIED)

ORIGINAL PAGE IS
OF POOR QUALITY

FOLDOUT FRAME 2

FOLDOUT FRAME 1

BEARING		
SCALE: ——	APPROVED BY	DRAWN BY BLOOM
DATE: 11-9-83		ASIGO
BEARING, BALL, ANNULAR Nº 1		
5034T07 SHEET 2		DRAWING NUMBER

TELEDYNE POST 18AB-15T – 18 x 24

ORIGINAL PAGE IS
OF POOR QUALITY

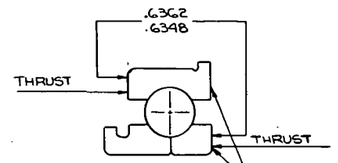

WITH THRUST APPLIED IN DIRECTION SHOWN & END PLAY REMOVED UNDER 11LB. GAGE LOAD THESE FACES TO BE FLUSH WITHIN .0002 & CROSS CORNER DIMENSION MET.

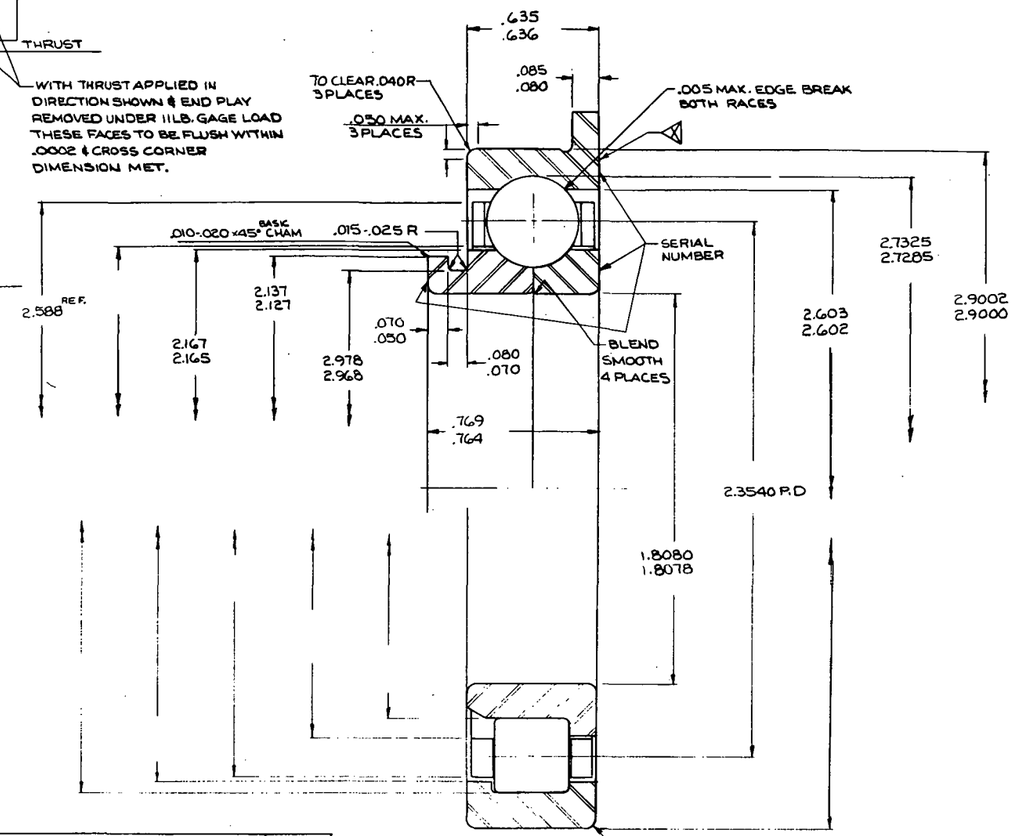

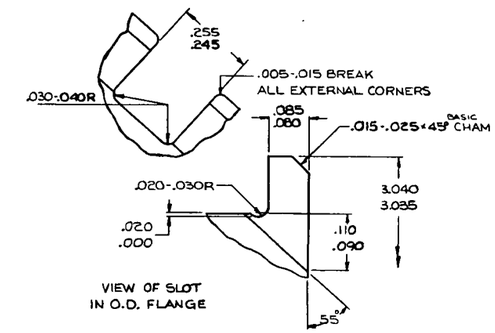

26 BALLS TO BE RETAINED IN RETAINER WHEN REMOVED FROM RACES
25 SPECIAL HEAT TREAT REQUIRED TO INCLUDE DETAILS OF MICROSTRUCTURE AND RETAINED AUSTENITE REQUIREMENTS } PER GE SPEC: _____
24 INNER RING HIGH POINT OF ECCENTRICITY TO BE IDENTIFIED
23 NITAL ETCH STAINS TO BE REMOVED
22 VENDOR SUBSTANTIATION REQUIRED
21 ⊳ VENDOR IDENTIFICATION REQUIREMENTS

20 RETAINER FACES TO BE PARALLEL WITHIN (TOTAL)		.002
19 RETAINER FACE TO BEARING FACE CLEARANCE		.000
18 LOBING, WAVINESS, & CHATTER TOLERANCES OF BEARING BORE & O.D.		60μ IN./30° SECT.
17 PILOT RING LOCATING DIAM. CONCENTRICITY		.0005
16 RETAINER LAND WIDTH (MIN. EFF.)		.068
15 PITCH DIAMETER		2.3540
14 CROSS CORNER DIMENSION W/ END PLAY REMOVED		.6348/.6342
13 BEARING MATERIALS STABILIZED TO OPERATE AT -65 TO +800°F.		
12 SURFACE ROUGHNESS (AA)	RING PILOT SURFACE	12
	RETAINER POCKET	
	RETAINER PILOT SURFACE	
	BEARING O.D.	
	BEARING BORE	
	INNER RACE	4
	OUTER RACE	4
	ROLLING ELEMENT	2
11 RETAINER (DIMENSIONS & ENGINEERING REQUIREMENTS ARE AFTER PLATING)	MATERIAL SPECIFICATION	AMS 6414
	HARDNESS R_c	28-32
	PLATING SPECIFICATION	AMS 2412
	PLATING THICKNESS	.001/.002
	TYPE OF RETENTION	INTEGRAL TANG
10 ROLLING ELEMENT & RING MATERIAL	HARDNESS R_c	PER GE SPEC:
	SPECIFICATION	C50TF56
9 ROLLING ELEMENT TO RETAINER POCKET CLRANCE		.021/.028
8 RETAINER BORE TO O.D. CONCENTRICITY		.002
7 RETAINER WIDTH, ~~MAX~~		.580/.586
6 RETAINER PILOT CLEARANCE, DIAMETRAL		.010/.015
5 RADIAL CLEARANCE UNDER 11 LB. GAGE LOAD		.0027/.0035
4 NUMBER OF ROLLING ELEMENTS		15
3 SIZE OF ROLLING ELEMENTS		.3750
2 AFBMA CLASS		7
1 THIS BEARING MUST CONFORM TO THE PREMIUM AIRCRAFT QUALITY REQUIREMENTS OF GE SPEC: M50TF5 CL-A (BEARING) ABEC CL-7 UNLESS OTHERWISE SPECIFIED		

12 BALL DIA. VARIATION IN A SINGLE BRG SHALL NOT EXCEED		.000005
11 BALL DIA. VARIATION IN A SINGLE BALL SHALL NOT EXCEED		.00001
10 RUNOUT OF INNER RING O.D. WHEN BORE IS USED AS REF		.001
9 RING GRAIN ORIENTATION TO BE SUBSTANTIALLY PARALLEL TO GROOVE SURFACES PER GE SPEC: _____		
8 RUNOUT OF SPLIT RING CONTACT FACE WITH RESPECT TO BORE OF SPLIT RING		.0001
7 END PLAY UNDER 11LB GAGE LOAD		.009
6 CONTACT ANGLE UNDER 11 LB GAGE LOAD		31°6'/33°54'
5 SHIM THICKNESS FOR SPLIT RINGS		.009
4 MAX. STEP AT SPLIT (SPLIT RINGS)		.0001
3 SHIM ANGLE		23°35'
2 RACE GROOVE DEPTH % OF BALL DIAMETER	OUTER	17
	INNER	23
1 RACE GROOVE CURVATURE % OF BALL DIAMETER	OUTER	510/515
	INNER	5275/5325

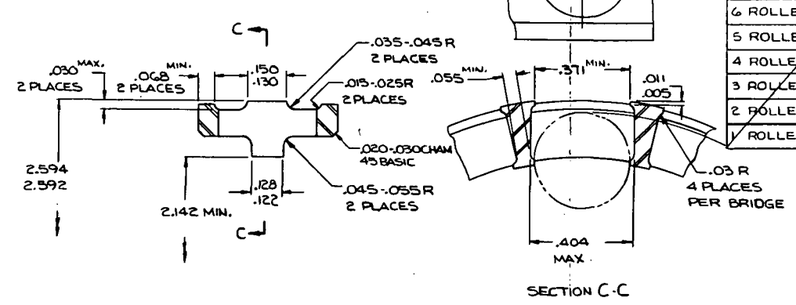

19 ROLLER POCKET LOCATED IN RETAINER WITHIN DIA. OF TRUE POSITION	
18 ROLLER COMPLIMENT TO BE RETAINED IN RETAINER WHEN REMOVED FROM ITS ASSOCIATED RING	
17 MIN. CLRANCE - ROLLER TO RETAINER RETENTION	
16 ROLLER DROP (ROLLER CENTERED IN RETAINER	
15 END FLOAT	
14 ROLLER LENGTH & DIAMETER VARIATION PER BRG.	
13 CAGE UNBANCE AT R.P.M.	
12 ROLLER END FACE FINISH	
11 ROLLER CORNER RADIUS	
10 FLANGE LAYBACK ANGLE	
9 FLANGE HEIGHT	
8 ROLLER TO FLANGE END CLEARANCE	
7 ROLLER CORNER RADIUS RUNOUT WITH RESPECT TO ROLLER CYLINDRICAL SECTION	
6 ROLLER END SQUARENESS	
5 ROLLET FLAT CENTRALITY	
4 ROLLER FLAT LENGTH	
3 ROLLER CROWN DROP	
2 ROLLER CROWN RADIUS	
1 ROLLER ROUNDNESS	

BEARING

SCALE ~ | APPROVED BY | DRAWN BY BLOOM
DATE 11-2-83 | REVISED ASICO

BEARING, BALL, ANNULAR Nº3

6038T48 SHEET 1. DRAWING NUMBER

FOLDOUT FRAME 1

FOLDOUT FRAME 2

APPLICATION NUMBER	1	2	3	4
NEXT ASS'Y DRWG NO.				
OPERATING SPECTRUM:				
FLIGHT CONDITION				
% TIME				
MEAN BEARING SPEED, RPM	44,700			
MEAN LOAD - AXIAL, LBS	417			
MEAN RADIAL, LBS	62			
TEMPERATURES:				
INNER RACE & ADJACENT MATING FACES	240			
OUTER RACE & ADJACENT MATING FACES	230			
ROLLING ELEMENTS	248			
LUBRICANT - OIL-IN	210			
OIL-OUT				
BEARING RADIAL CL'RANCE AT OPERATING TEMP.				

BASIC BEARING DATA:	
BEARING RADIAL CL'RANCE AT ROOM TEMPERATURE	.0031
SHIM ANGLE (OR EQUIV.)	23° 35'
SHIM THICKNESS (OR EQUIV) USED WHEN GRINDING SPLIT BALL BEARING RINGS	.009
RACE DEPTHS: (% BALL DIA.)	I: 23%; O: 17%
CAGE POCKET DETAIL DIMENSIONS:	
CIRCUMERENTIAL	.025
AXIAL	.025
RADIAL HEIGHT, MIN.	.166
CAGE GUIDING LAND CONTACT EFFECTIVE WIDTH	.092
PILOT DIAMETRAL CLEARANCE	.0125
CAGE WIDTH	.583
CAGE WEIGHT, LBS.	.136
CAGE TYPE	O.R.R.
CAGE LAND RIDING DIAMETER	2.602
PITCH DIAMETER	2.354
NO. OF ROLLING ELEMENTS	15
BALL DIAMETER	.375
CONTACT ANGLE	18°30'
OUTER RACE CURVATURE	.512
INNER RACE CURVATURE	.53
SURFACE ROUGHNESS:	
OUTER RACE	4
INNER RACE	4
BALL	2

LUBRICANT DATA:	
MIL. STANDARD	MIL-L-7808
~~IF LUBRICANT IS NONSTAND THE FOLLOWING DATA IS REQUIRED~~	
~~PRESSURE VISCOSITY @ 100°F~~	
~~PRESSURE VISCOSITY @ 210°F~~	
~~DENSITY @ 60°F~~	
~~THERMAL CONDUCTIVITY~~	
~~THERMAL EXPANSION~~	

NOTES:

1. WHERE PRACTICAL, RETAINER SHALL BE DESIGNED TO PERMIT REMOVAL OF ROLLING ELEMENTS FROM THE RINGS WITHOUT CUTTING OR BENDING TANGS. THE ROLLING ELEMENTS SHALL BE RETAINED IN THE RETAINER BY A "SNAP-IN" CONFIGURATION.
2. ROLLING ELEMENTS SHALL BE HARDER THAN THE RINGS BY ONE OR TWO POINTS, ROCKWELL "C". (IF SPECIFIED)

2 FOLDOUT FRAME

FOLDOUT FRAME

BEARING

SCALE: ———	APPROVED BY	DRAWN BY Bloom
DATE: 11-9-83		

BEARING, BALL, ANNULAR Nº3

6038T48 SHEET 2 DRAWING NUMBER

TELEDYNE POST 18AB 15T - 18 x 24

25 SPECIAL HEAT TREAT REQUIRED TO INCLUDE DETAILS OF MICROSTRUCTURE AND RETAINED AUSTENITE REQUIREMENTS PER GE SPEC.
24 INNER RING HIGH POINT OF ECCENTRICITY TO BE IDENTIFIED
23 NITAL ETCH STAINS TO BE REMOVED
22 VENDOR SUBSTANTIATION REQUIRED
21 ⟨X⟩ VENDOR IDENTIFICATION REQUIREMENTS

20 RETAINER FACES TO BE PARALLEL WITHIN (TOTAL)		.002
19 RETAINER FACE TO BEARING FACE CLEARANCE		.030 MIN.
18 LOBING, WAVINESS, & CHATTER TOLERANCES OF BEARING BORE & O.D.		
17 PILOT RING LOCATING DIAM. CONCENTRICITY		.0005
16 RETAINER LAND WIDTH (MIN. EFF.)		.087
15 PITCH DIAMETER		2.1260
14 CROSS CORNER DIMENSION W/ END PLAY REMOVED		N/A
13 BEARING MATERIALS STABILIZED TO OPERATE AT -65 TO +800°F.		
12 SURFACE ROUGHNESS (AA)	RING PILOT SURFACE	12
	RETAINER POCKET	
	RETAINER PILOT SURFACE	
	BEARING O.D.	
	BEARING BORE	
	INNER RACE	4
	OUTER RACE	4
	ROLLING ELEMENT	4
11 RETAINER (DIMENSIONS & ENGINEERING REQUIREMENTS ARE AFTER PLATING)	MATERIAL SPECIFICATION	AMS 6414
	HARDNESS R_c	28-32
	PLATING SPECIFICATION	AMS 2412
	PLATING THICKNESS	.001-.002
	TYPE OF RETENTION	BENT TANG
10 ROLLING ELEMENT & RING MATERIAL	HARDNESS R_c	60-64
	SPECIFICATION	BSOTE-105 CL-A
9 ROLLING ELEMENT TO RETAINER POCKET CLRANCE		.006-.013 A .005-.013 C
8 RETAINER BORE TO O.D. CONCENTRICITY		.002
7 RETAINER WIDTH, MAX.		.476
6 RETAINER PILOT CLEARANCE, DIAMETRAL		.006/.014
5 RADIAL CLEARANCE UNDER 11 LB. GAGE LOAD		.0010/.0014
4 NUMBER OF ROLLING ELEMENTS		14
3 SIZE OF ROLLING ELEMENTS		.2756 × .2756
2 AFBMA CLASS (RBEC)		5
1 THIS BEARING MUST CONFORM TO THE PREMIUM AIRCRAFT QUALITY REQUIREMENTS OF GE SPECS: M 50 TF3 CL-A (BEARING) RBEC CLASS 5; M 50 TF 2176 CL-A (ROLLER & RACE CONTOUR REQUIREMENTS)		

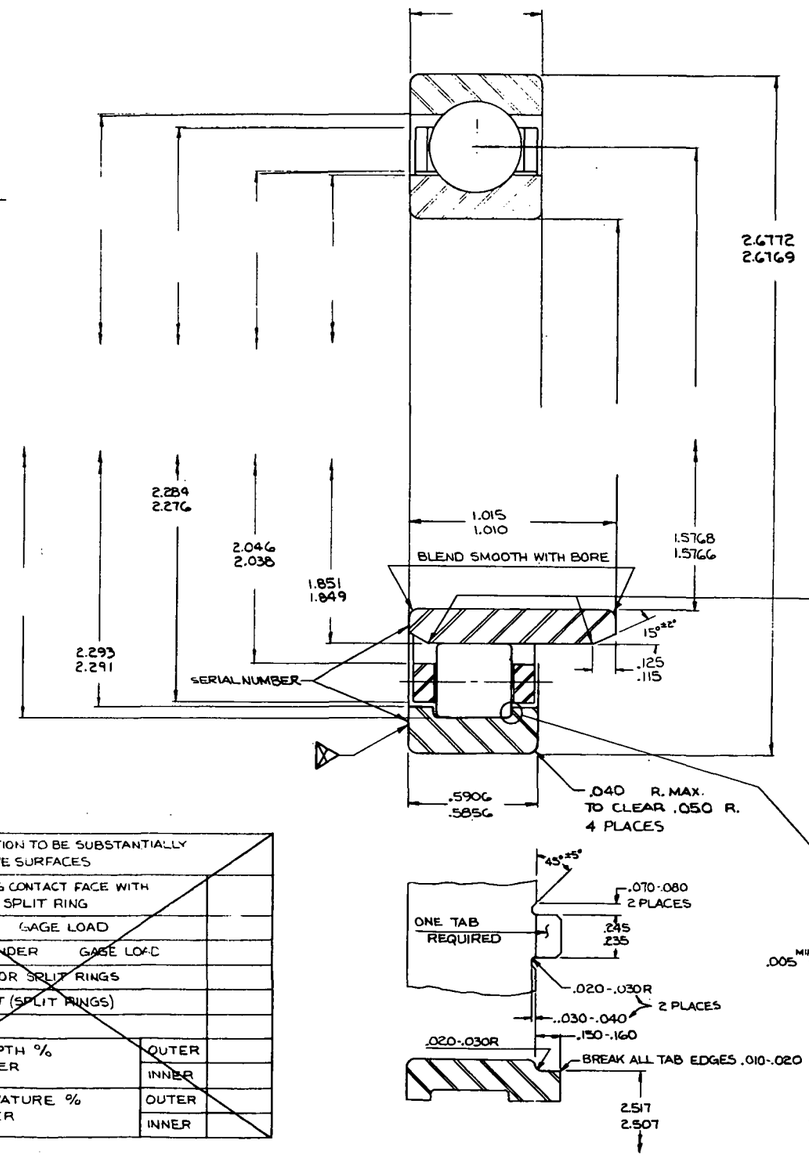

9 RING GRAIN ORIENTATION TO BE SUBSTANTIALLY PARALLEL TO GROOVE SURFACES		
8 RUNOUT OF SPLIT RING CONTACT FACE WITH RESPECT TO BORE OF SPLIT RING		
7 END PLAY UNDER GAGE LOAD		
6 CONTACT ANGLE UNDER GAGE LOAD		
5 SHIM THICKNESS FOR SPLIT RINGS		
4 MAX. STEP AT SPLIT (SPLIT RINGS)		
3 SHIM ANGLE		
2 RACE GROOVE DEPTH % OF BALL DIAMETER	OUTER	
	INNER	
1 RACE GROOVE CURVATURE % OF BALL DIAMETER	OUTER	
	INNER	

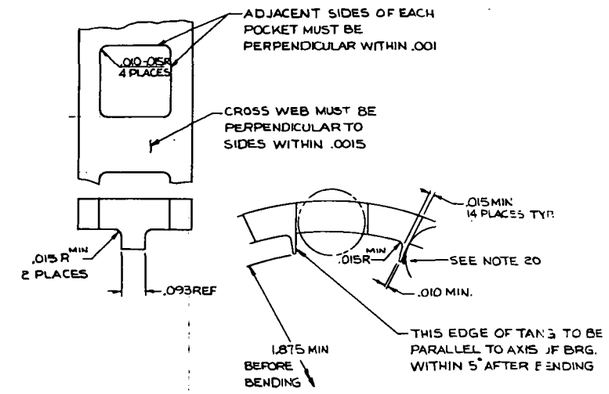

20 WITH RETAINER AGAINST OUTER RACE SHOULDER & ROLLER AGAINST OUTER RACE & RETAINER BRIDGE SECT., A MIN. CLRANCE OF .003 TO BE MAINTAINED BETWEEN ROLLER & ITS TANG

19 ROLLER POCKET LOCATED IN RETAINER WITHIN DIA. OF TRUE POSITION	.006
18 ROLLER COMPLIMENT TO BE RETAINED WHEN REMOVED FROM ITS ASSOC. RING	RETAINER MUST BE PARALLEL
17 MIN. CLRANCE - ROLLER TO RETAINER RETENTION	.003
16 ROLLER DROP (ROLLER CENTERED IN RETAINER)	.015/.040
15 END FLOAT	.485 MIN.
14 ROLLER LENGTH & DIAMETER VARIATION PER BRG.	
13 CAGE UNBANCE AT 500 R.P.M.	3 GM-CM
12 ROLLER END FACE FINISH	
11 ROLLER CORNER RADIUS	.015/.030
10 FLANGE LAYBACK ANGLE	0°00'/0°30'
9 FLANGE HEIGHT	.0556
8 ROLLER TO FLANGE END CLEARANCE	.0006/.0018
7 ROLLER CORNER RADIUS RUNOUT WITH RESPECT TO ROLLER CYLINDRICAL SECTION	.0005
6 ROLLER END SQUARENESS	
5 ROLLER FLAT CENTRALITY	
4 ROLLER FLAT LENGTH	.2356/.2456
3 ROLLER CROWN DROP	.00005/.00020
2 ROLLER CROWN RADIUS	23 IN.
1 ROLLER ROUNDNESS	

BEARING

SCALE 2X | APPROVED BY | DRAWN BY BLOOM
DATE 11-2-83 | REVISED A32.00

BEARING, ROLLER, CYL. № 5

5034T06 SHEET 1 | DRAWING NUMBER

FOLDOUT FRAME

2 FOLDOUT FRAME

APPLICATION NUMBER	1					2					3					4				
NEXT ASS'Y DWG. NO.																				
OPERATING SPECTRUM:																				
FLIGHT CONDITION																				
% TIME																				
MEAN: BEARING SPEED, RPM	20,900																			
MEAN: LOAD - AXIAL																				
MEAN: RADIAL, LBS.	80																			
TEMPERATURES (°F):																				
INNER RACE & ADJACENT MATING FACES	240																			
OUTER RACE & ADJACENT MATING FACES	230																			
ROLLING ELEMENTS	248																			
LUBRICANT - OIL-IN	210																			
OIL-OUT																				
BEARING RADIAL CL'RANCE AT OPERATING TEMP.																				

BASIC BEARING DATA	
BEARING RADIAL CL'RANCE AT ROOM TEMPERATURE	.0012
PITCH DIAMETER	2.126
ROLLER DIAMETER	.2756
ROLLER LENGTH	.2756
NO. OF ROLLING ELEMENTS	14
ROLLER SPHERICAL RADIUS (END)	FLAT
ROLLER CROWN RADIUS	25
ROLLER FLAT LENGTH	.092
OUTER RACEWAY EFFECTIVE LENGTH (AXIAL)	.2756
INNER RACEWAY EFFECTIVE LENGTH (AXIAL)	.393
OUTER RACEWAY CROWN RADIUS	NO CROWN
INNER RACEWAY CROWN RADIUS	NO CROWN
OUTER RACEWAY FLANGE ANGLE	1°
OUTER RING FLANGE TO ROLLER END PLAY	.001
SURFACE ROUGHNESS	
OUTER RACEWAY	4
INNER RACEWAY	4
ROLLERS	4
ROLLER ENDS	4
OUTER RING FLANGE	8
CAGE:	
TYPE	O.R.R.
RAIL LAND DIAMETER	2.292
SINGLE RAIL WIDTH	.098
RAIL TO LAND DIAMETRAL CLEARANCE	.010
CAGE POCKET CLEARANCE (AXIAL CIRCUM)	.010/.009
CAGE WEIGHT (LBS.)	.072
LOBING:	NONE
HEIGHT	
NUMBER	
LOAD ORIENTATION	

LUBRICANT DATA:	
MIL-STANDARD	MIL-L-7808
~~IF LUBRICANT IS NON-STANDARD THE FOLLOWING DATA IS REQUIRED~~	
~~PRESSURE VISCOSITY @ 100°F.~~	
~~PRESSURE VISCOSITY @ 210°F.~~	
~~DENSITY @ 60°F.~~	
~~THERMAL CONDUCTIVITY~~	
~~THERMAL EXPANSION~~	

NOTES:

1. WHERE PRACTICAL, RETAINER SHALL BE DESIGNED TO PERMIT REMOVAL OF ROLLING ELEMENTS FROM THE RINGS WITHOUT CUTTING OR BENDING TANGS. THE ROLLING ELEMENTS SHALL BE RETAINED BY A "SNAP-IN" CONFIGURATION.
2. ROLLER ELEMENTS SHALL BE HARDER THAN THE RINGS BY ONE OR TWO POINTS ROCKWELL "C" (IF SPECIFIED).

2 FOLDOUT FRAME

FOLDOUT FRAME

BEARING

SCALE: ~	APPROVED BY	DRAWN BY Bloom
DATE: 11-10-83		ASICO

BEARING, ROLLER, CYL. Nº 5

5034T06 SHEET 2 DRAWING NUMBER

TELEDYNE POST 18AB-15T – 18 x 24

FOLDOUT FRAME

FOLDOUT FRAME

WHEN BALL & CAGE COMPLEMENT ARE REMOVED FROM RACES, BALLS TO BE RETAINED IN RETAINER

25 SPECIAL HEAT TREAT REQUIRED TO INCLUDE DETAILS OF MICROSTRUCTURE AND RETAINED AUSTENITE REQUIREMENTS PER GE SPEC. _____

24 INNER RING HIGH POINT OF ECCENTRICITY TO BE IDENTIFIED

23 NITAL ETCH STAINS TO BE REMOVED

22 VENDOR SUBSTANTIATION REQUIRED

21 ▽ VENDOR IDENTIFICATION REQUIREMENTS

20 RETAINER FACES TO BE PARALLEL WITHIN (TOTAL)		.002
19 RETAINER FACE TO BEARING FACE CLEARANCE		.005
18 LOBING, WAVINESS, & CHATTER TOLERANCES OF BEARING BORE & O.D.		
17 PILOT RING LOCATING DIAM. CONCENTRICITY		.001
16 RETAINER LAND WIDTH (MIN. EFF.)		.103
15 PITCH DIAMETER		2.484
14 CROSS CORNER DIMENSION W/ END PLAY REMOVED		.6698/.6752
13 BEARING MATERIALS STABILIZED TO OPERATE AT -65 TO +800° F.		
12 SURFACE ROUGHNESS (AA)	RING PILOT SURFACE	12
	RETAINER POCKET	
	RETAINER PILOT SURFACE	
	BEARING O.D.	
	BEARING BORE	
	INNER RACE	4
	OUTER RACE	4
	ROLLING ELEMENT	2
11 RETAINER (DIMENSIONS & ENGINEERING REQUIREMENTS ARE AFTER PLATING)	MATERIAL SPECIFICATION	AMS 6414
	HARDNESS R_c	30-35
	PLATING SPECIFICATION	AMS 2412
	PLATING THICKNESS	.001/.002
	TYPE OF RETENTION	INTEGRAL TANG
10 ROLLING ELEMENT & RING MATERIAL	HARDNESS R_c	60-64
	SPECIFICATION GE	B50TF-10366 A
9 ROLLING ELEMENT TO RETAINER POCKET CLRANCE		.012/.015
8 RETAINER BORE TO O.D. CONCENTRICITY		
7 RETAINER WIDTH, MAX.		.763/.771
6 RETAINER PILOT CLEARANCE, DIAMETRAL		.012/.017
5 RADIAL CLEARANCE UNDER 11 LB. GAGE LOAD		.0039/.0047
4 NUMBER OF ROLLING ELEMENTS		12
3 SIZE OF ROLLING ELEMENTS		.5625
2 AFBMA CLASS		5

1 THIS BEARING MUST CONFORM TO THE PREMIUM AIRCRAFT QUALITY REQUIREMENTS OF GE SPEC. M50TF5 CL-A (BEARINGS) ABEC CL-5

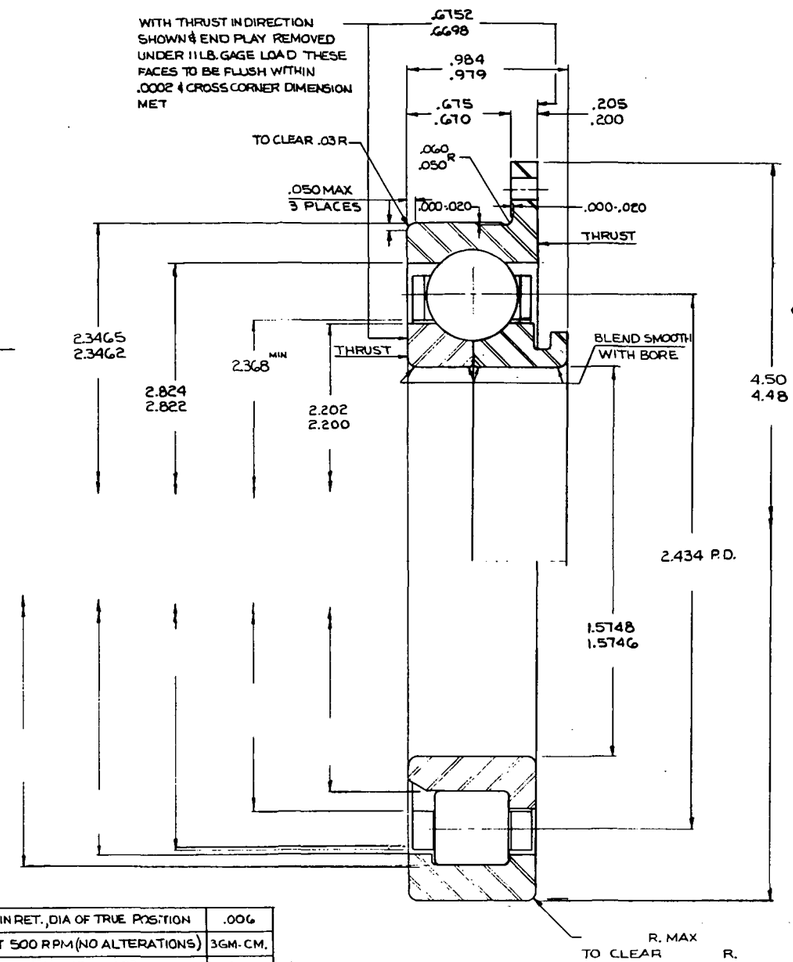

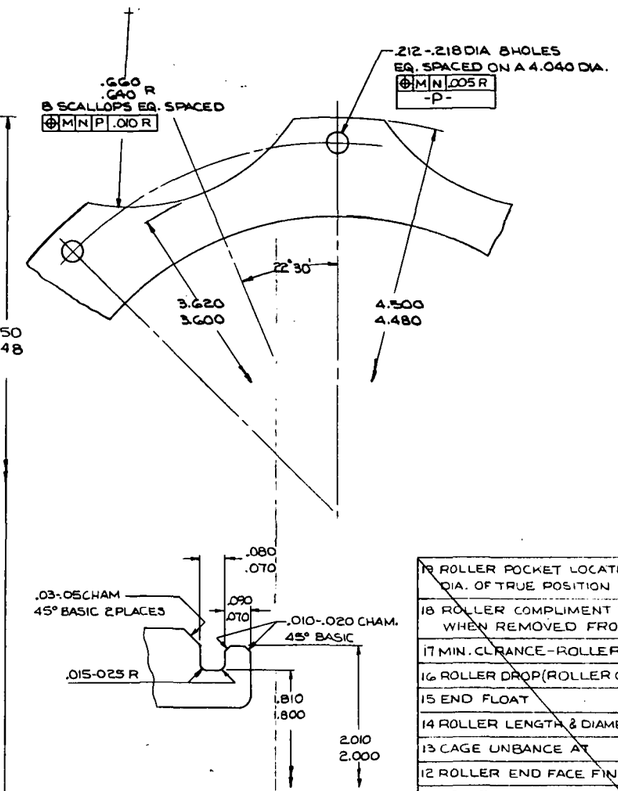

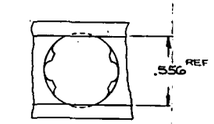

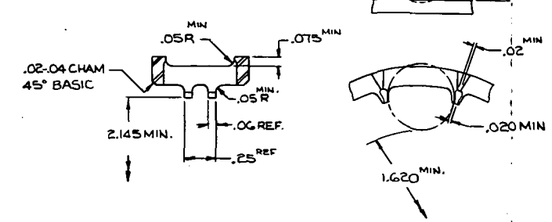

12 BALL POCKET LOCATED IN RET., DIA OF TRUE POSITION		.006
11 CAGE UNBALANCE AT 500 RPM (NO ALTERATIONS)		3GM-CM.
10 INNER RING O.D. RUNOUT WHEN BORE IS USED AS REF.		.001
9 RING GRAIN ORIENTATION TO BE SUBSTANTIALLY PARALLEL TO GROOVE SURFACES PER GE SPEC. _____		
8 RUNOUT OF SPLIT RING CONTACT FACE WITH RESPECT TO BORE OF SPLIT RING		.0001
7 END PLAY UNDER 11 LB. GAGE LOAD MAX.		.018
6 CONTACT ANGLE UNDER 22 LB GAGE LOAD		24°-28°
5 SHIM THICKNESS FOR SPLIT RINGS		.004
4 MAX. STEP AT SPLIT (SPLIT RINGS)		.0001
3 SHIM ANGLE		10.24°
2 RACE GROOVE DEPTH % OF BALL DIAMETER	OUTER	20
	INNER	25
1 RACE GROOVE CURVATURE % OF BALL DIAMETER	OUTER	51.75/52.25
	INNER	51.75/52.25

19 ROLLER POCKET LOCATED IN RETAINER WITHIN DIA. OF TRUE POSITION	
18 ROLLER COMPLIMENT TO BE RETAINED IN RETAINER WHEN REMOVED FROM ITS ASSOCIATED RING	
17 MIN. CLRANCE-ROLLER TO RETAINER RETENTION	
16 ROLLER DROP (ROLLER CENTERED IN RETAINER	
15 END FLOAT	
14 ROLLER LENGTH & DIAMETER VARIATION PER BRG.	
13 CAGE UNBANCE AT R.P.M.	
12 ROLLER END FACE FINISH	
11 ROLLER CORNER RADIUS	
10 FLANGE LAYBACK ANGLE	
9 FLANGE HEIGHT	
8 ROLLER TO FLANGE END CLEARANCE	
7 ROLLER CORNER RADIUS RUNOUT WITH RESPECT TO ROLLER CYLINDRICAL SECTION	
6 ROLLER END SQUARENESS	
5 ROLLET FLAT CENTRALITY	
4 ROLLER FLAT LENGTH	
3 ROLLER CROWN DROP	
2 ROLLER CROWN RADIUS	
1 ROLLER ROUNDNESS	

SCALE ~	APPROVED BY	DRAWN BY BLOOM
DATE 11-2-83		REVISED
BEARING BALL, ANNULAR Nº 6		
5034T28	SHEET 1	DRAWING NUMBER

APPLICATION NUMBER	1	2	3	4
NEXT ASS'Y DRWG NO.				
OPERATING SPECTRUM				
FLIGHT CONDITION				
% TIME				
BEARING SPEED, RPM	20,900			
LOAD - AXIAL, LBS.	720			
RADIAL, LBS.	80			
TEMPERATURES:				
INNER RACE & ADJACENT MATING FACES	240			
OUTER RACE & ADJACENT MATING FACES	230			
ROLLING ELEMENTS	248			
LUBRICANT - OIL-IN	210			
OIL-OUT				
BEARING RADIAL CL'RANCE AT OPERATING TEMP.				

BASIC BEARING DATA:	
BEARING RADIAL CL'RANCE AT ROOM TEMPERATURE	.0043
SHIM ANGLE (OR EQUIV.)	10° 24'
SHIM THICKNESS (OR EQUIV) USED WHEN GRINDING SPLIT BALL BEARING RINGS	.004
RACE DEPTHS (% BALL DIA.)	I: 25%; O: 20%
CAGE POCKET DETAIL DIMENSIONS:	
CIRCUMERENTIAL	.0175
AXIAL	.0175
RADIAL HEIGHT, MIN.	.218
CAGE GUIDING LAND CONTACT EFFECTIVE WIDTH	.095
PILOT DIAMETRAL CLEARANCE	.0145
CAGE WIDTH	.763 - .771
CAGE WEIGHT, LBS.	.306
CAGE TYPE	O.R.R.
CAGE LAND RIDING DIAMETER	2.806
PITCH DIAMETER	2.433
NO. OF ROLLING ELEMENTS	12
BALL DIAMETER	.5625
CONTACT ANGLE	5.66°
OUTER RACE CURVATURE	.52
INNER RACE CURVATURE	.52
SURFACE ROUGHNESS:	
OUTER RACE	4
INNER RACE	4
BALL	2

LUBRICANT DATA:	
MIL. STANDARD	MIL-L-7808
~~IF LUBRICANT IS NONSTAND THE FOLLOWING DATA IS REQUIRED~~	
~~PRESSURE VISCOSITY @ 100°F~~	
~~PRESSURE VISCOSITY @ 210°F~~	
~~DENSITY @ 60°F~~	
~~THERMAL CONDUCTIVITY~~	
~~THERMAL EXPANSION~~	

NOTES

1. WHERE PRACTICAL, RETAINER SHALL BE DESIGNED TO PERMIT REMOVAL OF ROLLING ELEMENTS FROM THE RINGS WITHOUT CUTTING OR BENDING TANGS. THE ROLLING ELEMENTS SHALL BE RETAINED IN THE RETAINER BY A "SNAP-IN" CONFIGURATION.
2. ROLLING ELEMENTS SHALL BE HARDER THAN THE RINGS BY ONE OR TWO POINTS, ROCKWELL "C". (IF SPECIFIED)

2 FOLDOUT FRAME

FOLDOUT FRAME

BEARING

SCALE: —	APPROVED BY	DRAWN BY
DATE:		

BEARING, BALL, ANNULAR Nº6

5034T28 SHEET 2 DRAWING NUMBER

*® TELEDYNE POST 18A8-15T - 18 x 24

1. Report No.	2. Government Accession No.	3. Recipient's Catalog No.
NASA CR-174710 USAAVSCOM-TR-85-F-1		

4. Title and Subtitle	5. Report Date
Review and Critical Analysis - Rolling-Element Bearings for System Life and Reliability	March 1985
	6. Performing Organization Code
7. Author(s)	8. Performing Organization Report No.
Arthur S. Irwin, William J. Anderson, and William J. Derner	None
	10. Work Unit No.
9. Performing Organization Name and Address	11. Contract or Grant No.
Arthur S. Irwin Co., Inc. Driftwood Center Bemus Point, New York 14712	NAS 3-23520
	13. Type of Report and Period Covered
12. Sponsoring Agency Name and Address	Contractor Report
NASA Lewis Research Center, Cleveland, Ohio 44135, and U.S. Army Aviation Systems Command, St. Louis, Missouri	14. Sponsoring Agency Code 505-33-7C

15. Supplementary Notes

Final report. Project Managers, Erwin V. Zaretsky, Structures Division, NASA Lewis Research Center, Cleveland, Ohio 44135, and Martin Joseph, U.S. Army Aviation Systems Command, St. Louis, Missouri.

16. Abstract

A ball and cylindrical roller bearing technical specification which incorporates the latest state-of-the-art advancements was prepared with the fullest cooperation and participation of a broad industry committee for the purpose of improving bearing reliability in U.S. Army aircraft. An examination of current U.S. Army aviation bearing designs and applications, including life analyses, was made in preparing the specification. A bearing restoration and refurbishment specification was also prepared, with the goal of improving bearing availability.

17. Key Words (Suggested by Author(s))	18. Distribution Statement
Rolling-element bearings; Bearing specification; Bearing manufacture and procurement; Bearing refurbishment and restoration	Unclassified - unlimited STAR Category 37

19. Security Classif. (of this report)	20. Security Classif. (of this page)	21. No. of pages	22. Price*
Unclassified	Unclassified	233	All

*For sale by the National Technical Information Service, Springfield, Virginia 22161

National Aeronautics and
Space Administration

Lewis Research Center
Cleveland, Ohio 44135

Official Business
Penalty for Private Use $300

SECOND CLASS MAIL

ADDRESS CORRECTION REQUESTED

U.S. MAIL

Postage and Fees Paid
National Aeronautics and
Space Administration
NASA-451

NASA