NAT'L INST. OF STAND & TECH R.I.C.
A11105 353864

National Bureau of Standards
Library, N.W. Bldg
FEB 14 1966

Reference book not to be
taken from the library.

NBS

Technical Note 276

RADIOCHEMICAL ANALYSIS: ACTIVATION ANALYSIS, INSTRUMENTATION, RADIATION TECHNIQUES, AND RADIOISOTOPE TECHNIQUES JULY 1964 TO JUNE 1965

U. S. DEPARTMENT OF COMMERCE
NATIONAL BUREAU OF STANDARDS

THE NATIONAL BUREAU OF STANDARDS

The National Bureau of Standards is a principal focal point in the Federal Government for assuring maximum application of the physical and engineering sciences to the advancement of technology in industry and commerce. Its responsibilities include development and maintenance of the national standards of measurement, and the provisions of means for making measurements consistent with those standards; determination of physical constants and properties of materials; development of methods for testing materials, mechanisms, and structures, and making such tests as may be necessary, particularly for government agencies; cooperation in the establishment of standard practices for incorporation in codes and specifications; advisory service to government agencies on scientific and technical problems; invention and development of devices to serve special needs of the Government; assistance to industry, business, and consumers in the development and acceptance of commercial standards and simplified trade practice recommendations; administration of programs in cooperation with United States business groups and standards organizations for the development of international standards of practice; and maintenance of a clearinghouse for the collection and dissemination of scientific, technical, and engineering information. The scope of the Bureau's activities is suggested in the following listing of its three Institutes and their organizational units.

Institute for Basic Standards. Applied Mathematics. Electricity. Metrology. Mechanics. Heat. Atomic Physics. Physical Chemistry. Laboratory Astrophysics.* Radiation Physics. Radio Standards Laboratory:* Radio Standards Physics; Radio Standards Engineering. Office of Standard Reference Data.

Institute for Materials Research. Analytical Chemistry. Polymers. Metallurgy. Inorganic Materials. Reactor Radiations. Cryogenics.* Materials Evaluation Laboratory. Office of Standard Reference Materials.

Institute for Applied Technology. Building Research. Information Technology. Performance Test Development. Electronic Instrumentation. Textile and Apparel Technology Center. Technical Analysis. Office of Weights and Measures. Office of Engineering Standards. Office of Invention and Innovation. Office of Technical Resources. Clearinghouse for Federal Scientific and Technical Information.**

---

*Located at Boulder, Colorado, 80301.
**Located at 5285 Port Royal Road, Springfield, Virginia, 22171.

NATIONAL BUREAU OF STANDARDS

Technical Note 276

National Bureau of Standards
NOV 14 1968
151674
QC100
.U5753
Ref.

ISSUED JANUARY 7, 1966

RADIOCHEMICAL ANALYSIS: ACTIVATION ANALYSIS, INSTRUMENTATION, RADIATION TECHNIQUES, AND RADIOISOTOPE TECHNIQUES JULY 1964 TO JUNE 1965

Edited by James R. DeVoe
Radiochemical Analysis Section
Analytical Chemistry Division
Institute for Materials Research

NBS Technical Notes are designed to supplement the Bureau's regular publications program. They provide a means for making available scientific data that are of transient or limited interest. Technical Notes may be listed or referred to in the open literature.

For sale by the Superintendent of Documents, U.S. Government Printing Office
Washington, D.C., 20402 - Price $1

FOREWORD

The Analytical Chemistry Division was established as a separate division at the National Bureau of Standards on September 1, 1963, and became part of the Institute for Materials Research in the February 1, 1964 reorganization. It consists at present of seven sections and about 85 technical personnel encompassing some 30 different analytical competences from activation analysis and atomic absorption to vacuum fusion and X-ray spectroscopy. These competences, and in turn the sections which they comprise, are charged with research at the forefront of analysis as well as awareness of the practical sample, be it standard reference material or service analysis. In addition it is their responsibility to inform others of their efforts.

Formal publication in scientific periodicals is highly important. In addition, however, it has been my experience that informal, annual summaries of progress describing efforts of the past year can be very valuable in disseminating information. At the National Bureau of Standards such publications fit logically into the category of a Technical Note. In 1965 we plan to issue these summaries for all of our sections. The following is the second annual report on progress of the Radiochemical Analysis Section.

W. Wayne Meinke, Chief
Analytical Chemistry Division

PREFACE

This is the second annual progress report for the Radiochemical Analysis Section of the Analytical Chemistry Division.

It is the intent of this section to develop measurement techniques for the qualitative, quantitative and structural analysis of materials through the use of radioisotopes. Since the Analytical Chemistry Division is interested specifically in the characterization of very pure materials, and since radiochemical methods are particularly suitable, a large portion of this section's effort is directed towards the analysis of very small concentrations of the elements.

A basic requirement for the development of such measurement techniques using radioisotopes is the thorough understanding of the chemical, nuclear, and physical principles which form the foundation of a new analytical measurement technique. However, it is essential that the developed methods be practical in the sense that they can be used successfully on materials in which science and industry have an interest. Therefore, these developed techniques are applied to the analysis of NBS Standard Reference Materials where considerable cross checking of analytical techniques is required throughout the process of certification. Some misunderstanding has existed as to whether the Analytical Chemistry Division certifies a particular analytical method. Under no circumstances is this done. The material is certified for composition and therefore, it should be independent

of the analytical technique that is used. This section is attempting to make detailed error analyses of the methods used to assure as high an accuracy as possible.

The section is organized into four groups: activation analysis, instrumentation, radiation techniques, and radioisotope tracer techniques. The purpose and particular interests of these groups are reflected in the projects that will be described in each part of this report. A synopsis of the activities of each group appears at the beginning of each part.

Like last year, much effort has been devoted to the planning and construction of facilities. Toward the end of 1965 the activation analysis group and the radiation techniques group will be moving into the new reactor building at Gaithersburg. A short description of these facilities is given in this report. The radioisotope techniques group will move into the general purpose laboratories with the rest of the Division in the spring of 1966.

During this year the section has shown marked activity as is indicated by the fact that there have been 16 talks presented and 11 papers published by the several groups in this section.

A roster of the groups in this section is listed in part 7. Our major staffing requirements have been satisfied with the exception of one or two areas. Continual efforts will be made to upgrade the quality of our programs. The

National Bureau of Standards has a program whereby a scientist from the United States or abroad may work as a guest in our laboratory for one or two years. It is hoped that by utilizing this procedure in this section we will be able to perpetuate a stimulating environment.

In order to specify adequately the procedures, it has been necessary occasionally to identify commercial materials and equipment in this report. In no case does such identification imply recommendation or endorsement by the National Bureau of Standards, nor does it imply the material or equipment identified is necessarily the best available for the purpose.

James R. DeVoe, Chief
Radiochemical Analysis Section

TABLE OF CONTENTS

PAGE

1. FACILITIES 1

Nuclear Reactor 2

Linear Electron Accelerator 6

Equipment 7

Digital Computers 9

2. INSTRUMENTATION 13

A Frequency Correlation Device Employing a One-to-One Digital Technique 13

Abstracts of Publications 19

Interface Between Teletypewriter and Nuclear Instruments 19

Through-port for Reactor 20

3. ACTIVATION ANALYSIS 23

Determination of Trace Amounts of Argon in Silicon Single Crystals 25

Determination of Chlorine in Polystyrene . . . 30

Determination of Hafnium in Zirconium and Zircaloy Standard Reference Materials . . . 35

Determination of the Neutron Flux Spectrum for the NRL Pneumatic Tube System 41

Activation Analysis with the NBS Electron Linear Accelerator 48

Utilization of Computers in Activation Analysis 49

A Gamma-Ray Spectrometer Utilizing a Beta-Gamma-Gamma Sum Coincidence Technique . . . 52

Abstracts of Publications 70

Copper and Zinc in Lung Tissue 70

TABLE OF CONTENTS (con't)

PAGE

NBS Facilities and program 71

Tellurium in Cartridge Brass 72

4. RADIATION TECHNIQUES 74

Standard Reference Material for the Differential Chemical Shift of Iron Compounds in Mössbauer Spectroscopy 75

Standard Reference Material for Iron in Mössbauer Spectroscopy 83

Differential Chemical Shift of Iron Compounds . 83

Absolute Velocity Mössbauer Spectrometer Using Optical Fringe Counting Technique 84

Design of a Drift-Free Mössbauer Spectrometer . 89

Cosine Effect in Mössbauer Spectroscopy 101

The Sn^{119m} - Palladium Mössbauer Source 105

Abstracts of Publications 107

Drift-Free Mössbauer Spectrometer 107

A Standard Reference Material for Mössbauer Spectrometry of Iron and Its Compounds . . 108

Mössbauer Line Broadening in SnO_2 Due to Twinning Effects 109

Standardization of the Differential Chemical Shift for Fe^{57} 110

A Flip-Flop with Adjustable Bipolar Output . 110

5. RADIOISOTOPE TECHNIQUES 111

A Method of Trace Element Analysis With Radioisotopic Tracers in a System Using Heterogeneous Equilibrium 112

Differential Controlled Potential Coulometry Utilizing Radioisotopic Tracers 117

TABLE OF CONTENTS (con't)

PAGE

Some Results on the Substoichiometric Radioisotope Dilution Trace Element Analysis of Silver and Iron 124

The Effect of Fluoride on the Distribution Coefficient of Ferric Thiocyanate in Isobutanol - Water 137

Abstract of Publication 146

Trace Determination of Cobalt by Substoichiometric and Radiometric Methods 146

6. MISCELLANEOUS 149

Sealed Source Fabrication 149

7. PERSONNEL 152

8. ACKNOWLEDGMENTS 153

9. LIST OF REFERENCES 154

LIST OF FIGURES

FIGURE NO.		PAGE
1.	Floor plan - main level, NBS Reactor Building Gaithersburg, Maryland	4
2.	Radiological laboratories and counting room in reactor building basement, Gaithersburg, Maryland	5
3.	Linac pneumatic tube facility, NBS Radiation Physics Laboratory, Gaithersburg, Maryland	8
4.	Frequency correlator logic diagram	17
5.	Decay curves of argon-silicon mixture	29
6.	Gamma-Ray Spectrum of Polyethylene snap-cap vial	31
7.	Sample placement in NRL rabbit; chlorine in polystyrene	32
8.	Variation of count rate with sample size	35
9.	Sample placement in NRL rabbit; hafnium in zirconium	38
10.	Determination of integral neutron flux in NRL pneumatic tube	44
11.	Plot of neutron flux vs. height in the polyethylene rabbit	46
12.	Diagram of general connections for $\beta\gamma\gamma$ coincidence sum spectrometer	53
13.	Electronic apparatus for β-γ-γ coincidence sum spectrometer	54
14.	β-scintillator-phototube mounting assembly	55
15.	Detector assembly for β-γ-γ coincidence sum spectrometer	56
16.	β-detector high voltage wiring system	57
17.	Non-inverting preamplifier	58
18.	Wiring of β-detector PM tube	59

LIST OF FIGURES (Con't)

FIGURE NO.		PAGE
19.	Wiring of gamma detector	60
20.	Gamma high voltage anode wiring diagram . . .	61
21.	Dual-preamplifier wiring diagram	61
22.	Mixer circuits modified	62
23.	Comparison of beta spectrum on one phototube with that gated by the coincident pulse of a second phototube on the same scintillator . .	64
24.	β-γ-γ coincidence sum spectrum of Co^{60}	67
25.	Single crystal of sodium nitroprusside, showing habit and orientation of platelet . .	81
26.	Mössbauer spectrum of Standard Reference Material for Fe	82
27.	Optical system for measuring absolute velocity	86
28.	General layout of Doppler drive using optical interferometry	88
29.	Mössbauer drive and velocity measuring system.	89
30.	Flexure plate	91
31.	Mechanical design of the Mössbauer spectrometer	93
32.	Electronics for NBS Mössbauer spectrometer . .	94
33.	The main frame of the Doppler Drive	96
34.	Schematic of Doppler Drive	97
35.	Detector gate control	99
36.	Geometrical relationship between source and detector for gamma rays emitted at angle β . .	102

LIST OF FIGURES (Con't)

FIGURE NO.		PAGE
37.	Normalized counting rate as a function of the ratio of Doppler velocity V to a spectrometer velocity V_o	104
38.	Least square fit to straight line, Standard Reference Material No. 673	116
39.	Apparatus for differential controlled-potential coulometry	121
40.	Distribution coefficient versus negative log of the concentration of sodium fluoride expressed in mole $liter^{-1}$	141
41.	Distribution coefficient versus negative log of the concentration of sodium fluoride expressed in mole $liter^{-1}$	143
42.	Distribution coefficient versus negative log of the concentration of sodium fluoride expressed in mole liter-1	144
43.	Distribution coefficient versus negative log of the concentration of sodium fluroide expressed in mole $liter^{-1}$	145
44.	Exploded view of source assemlby	150

LIST OF TABLES

TABLE NO.		PAGE
1.	Pneumatic tube system data for NBS reactor	3
2.	Pneumatic tube system data for NBS reactor neutron fluxes	3
3.	Results of chlorine determination	34
4.	Results of hafnium analysis	40
5.	Nuclear data for activation foils	43
6.	Calculated sensitivities for activation analysis using β,γ,γ sum-coincidence gamma-radiation detection	68
7.	Chemical, physical and crystal properties of $Na_2[Fe(CN)_5NO]\cdot 2H_2O$	80
8.	Determination of cobalt in NBS Standard Reference Material 671, 672, 673 of nickel oxide	117
9.	Differential controlled-potential coulometry of cadmium ideal solutions in 0.1 KNO_3	123
10.	Analysis for silver in brass samples . .	133
11.	Single substoichiometric radioisotopic dilution analysis of nickel oxide for trace amounts of iron	135
12.	Determination of trace-iron by single substoichiometric radioisotopic dilution analysis on ideal solutions	136

RADIOCHEMICAL ANALYSIS: ACTIVATION ANALYSIS, INSTRUMENTATION, RADIATION TECHNIQUES, AND RADIOISOTOPE TECHNIQUES

July 1964 to June 1965

Edited by James R. DeVoe

ABSTRACT

This is the second summary of progress of the Radiochemical Analysis Section of the Analytical Chemistry Division at the National Bureau of Standards.

Arrangements for the new facilities at the reactor building and Linac are in their final stages of completion. Additional work is described on the electronics for the handling of data from pulse height analyzers as well as the use of digital computers for processing these data.

A Mössbauer spectrometer which uses optical interferometry in the Doppler drive, and the mechanical design for the electromechanical drive described in last years report are presented. A description of chemical shift of iron compounds is given. The use of a correction factor for certain source detector geometries are described for Mössbauer spectroscopy. A new source of Sn^{119m} in palladium which produces a very narrow line width is also described.

For the first time a trace element has been certified in a Standard Reference Material with the assistance of the activation analysis technique. Flux measurements for the NRL reactor are given. A number of special analyses for various

NBS projects by activation analysis are described (e.g. argon in silicon, chlorine in polystyrene, hafnium in zirconium). A beta-gamma sum coincidence gamma ray spectrometer is described.

A constant potential electrochemical method of analysis using radioisotopic tracers is presented which has potential high sensitivity. A method of using radioisotopic tracers in heterogeneous equilibrium between an aqueous medium of cobalt to be analyzed and manganese dioxide impregnated filter paper is described. Some results on the precision of the substoichiometric radioisotope dilution analysis of silver and iron are presented.

Key words: NBS reactor, NBS Linac, digital computer, digital computers frequency comprator, nuclear instrumentation, argon in silicon, chlorine in polystyrene, hafnium in zirconium, neutron fluxes, gamma-ray spectrometers, copper and zinc in lung tissue, tellurium in brass, differential chemical shift, Mössbauer spectroscopy, Mössbauer instrumentation, Sn^{119m}-Palladium Mössbauer sources, iron compounds, tin compounds, standardization of iron compounds, radioisotope techniques, controlled potential coulometry, substoichiometric radioisotope dilution, distribution coefficient of ferric thiocynate in isobutanol water, radiometric techniques, sealed source fabrication.

1. FACILITIES

For the past year the Radiochemical Analysis Section has utilized the nuclear reactor at the Naval Research Laboratory. In order to conduct activation analysis utilizing short-lived radioisotopes the Section leased a radiochemical hood near the pneumatic tube system at this reactor. The majority of the samples which can be done by utilizing long-lived radioisotopes was transported to the radiochemical laboratory at the National Bureau of Standards. Of course this arrangement is temporary until we are located in our own reactor building at Gaithersburg.

The Radiochemical Analysis Section is acting as coordinator between the users of the radiochemical laboratory facilities in the reactor building and the NBS reactor division. It is expected that there will be many users from nearby universities and other government agencies. As a result of our contacts with these potential users, we have found it necessary to expand the overall capacity and capability of the new reactor laboratory even before occupancy.

It is becoming necessary and advantageous to reduce time lost in performing tedious computation or information and data retrieval. Therefore, it is apparent that considerable effort must be placed on the development of a digital computer facility. We believe that we have a very satisfactory solution to the problem of providing this facility economically.

Even though most of the plans for our new Gaithersburg facilities have been completed, very little of this will be described in this report. A comprehensive description of these facilities with appropriate photographs will be included in next year's progress report.

A. Nuclear Reactor

A heavy water moderated, enriched fuel, tank-type research reactor, designed to operate at from 10 to 25 megawatts, is being constructed at the new National Bureau of Standards facility at Gaithersburg, Maryland (about 22 miles from downtown Washington, D.C.). Special features of the reactor include, (a) split fuel elements for minimization of fast neutron and gamma fluxes, (b) all heavy water moderation with graphite only in the outer region of the thermal column, (c) a large cryostat hole for a cold neutron facility, and (d) a converter assembly for fast neutron flux work. An operating cycle of 3 weeks (24 hours a day) with a 2 day shutdown is anticipated. Nine pneumatic tubes (one and one half inches in diameter - carbon dioxide driven) are planned for insertion into the reactor as summarized in table 1. Table 2 gives the expected fluxes and cadmium ratios for each of the tubes. Each of the nine terminals will have two sending and receiving stations located in 18 different radiochemical hoods situated in the various radiochemical laboratories in the reactor building (figures 1 and 2). Seven laboratories are of the two-man module type

Table 1. Pneumatic tube system data for NBS reactor.

Specifications:

Tube size	1-1/2" (i.d.)
Number of terminals[a].....	9
Number of stations[a] ..... (sending-receiving)	18
Rabbit speed	30-45 ft/s
Pneumatic tube Gas and pressure	CO_2 at atmospheric pressure or lower

[a]Planned and proposed.

Table 2. Pneumatic tube system data for NBS reactor neutron fluxes.

Terminal No. or design	Approximate flux ($\times 10^{14}$) $n \cdot cm^{-2} sec^{-1}$		
	Slow	Fast	Gold cadmium ratio
IR	0.9	0.8	10
IS	1.4	0.6	20
IT	1.0	0.3	> 30
IU	0.4	0.02	250
Top of core[a]	0.1-1.0	-	High
Converter thimble[b]	-	3.2	-
Thermal column	0.1	-	-
Liquid N_2 cooled	0.3	-	-

[a]In heavy water.

[b]Highly enriched uranium or lithium deuteride.

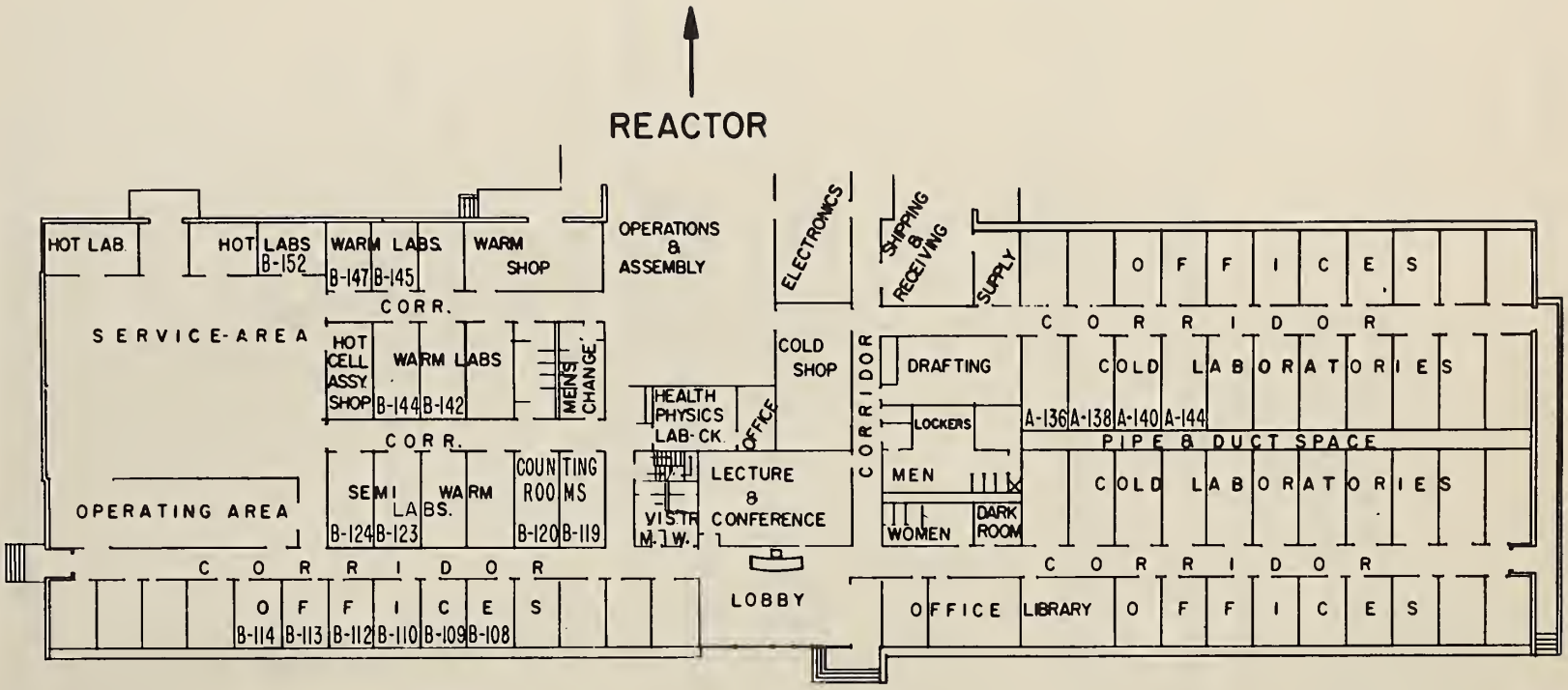

Figure 1. Floor plan - main level, NBS Reactor Building, Gaithersburg, Maryland

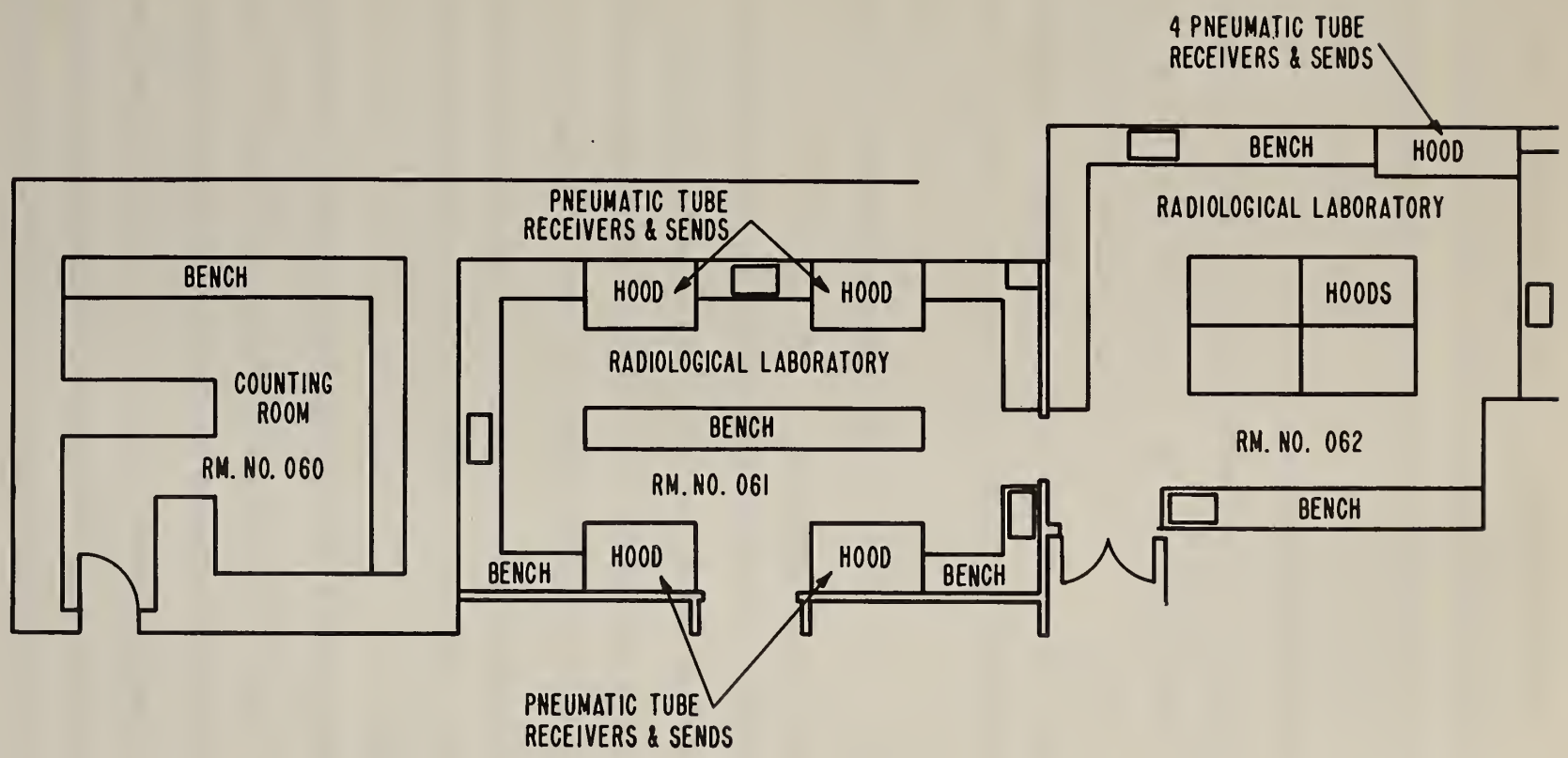

Figure 2. Radiological laboratories and counting room in Reactor Building basement, Gaithersburg, Md.

and will each have two hoods. In addition, eight people can use the radiological laboratories with the associated counting room (figure 2). Four cold laboratories, two counting rooms, and six offices complete the facilities available in the reactor building for our use.

Longer periods of irradiation will probably be made by use of holes at the reactor top or in beam-ports available on the reactor floor. A thru-port will allow work with millisecond half-life radioactivities. In the latter facility, a sample will be "shot" at rifle-bullet speed through the reactor.

(G. W. Smith and J. R. DeVoe)

B. Linear Electron Accelerator

The Radiation Physics Division of The National Bureau of Standards is installing a linear electron accelerator which will accelerate 500 μA (average) of electrons up to 130 MeV. Photons, neutrons, and charged particles can be generated and the activation analysis group has assembled a pneumatic tube system to perform nuclear activation with these radiations.

The NBS Linac will produce bremsstrahlung of energies up to 130 MeV with dose rates as high as 10^9 rads per minute. By means of secondary targets such as uranium or tungsten, average high energy neutron fluxes of 4×10^{12} $n \cdot cm^{-2}$ sec^{-1} can be obtained in a limited volume. Initial work will be centered in the 45° experimental room using a pneumatic tube

system and radiochemical hood, as shown in figure 3. Suitable target and cooling-loop systems will be developed and tested to provide primary gamma-ray and secondary neutron and other particle beams. It is expected that the system will be especially attractive for activation analysis of low atomic numbered elements at high sensitivity through (γ,n) reactions.

(G. W. Smith and J. R. DeVoe)

C. Equipment

In order to accelerate the development of any new scientific group it is advisable to have certain basic pieces of equipment that can serve to fulfill a variety of requirements. The following paragraphs give a short description of some of this equipment.

A high vacuum system will be used for the preparation of thin counting sources or thin target materials for use in studying nuclear reactions, for preparation of Mössbauer sources or absorbers, for depositing conductive layers on electronic systems, for certain preparative stages of solid state radiation detectors and for various other experiments requiring high vacuum. The system model No. 7-7087 manufactured by the Ultek Corporation, has pumped most of our experimental arrangements inside of the bell jar to 10^{-9} torr in approximately one half hour.

We have purchased a 10 kW induction heater, to be used in a furnace in conjunction with the vacuum system. Other auxiliary equipment for the vacuum system are a high current

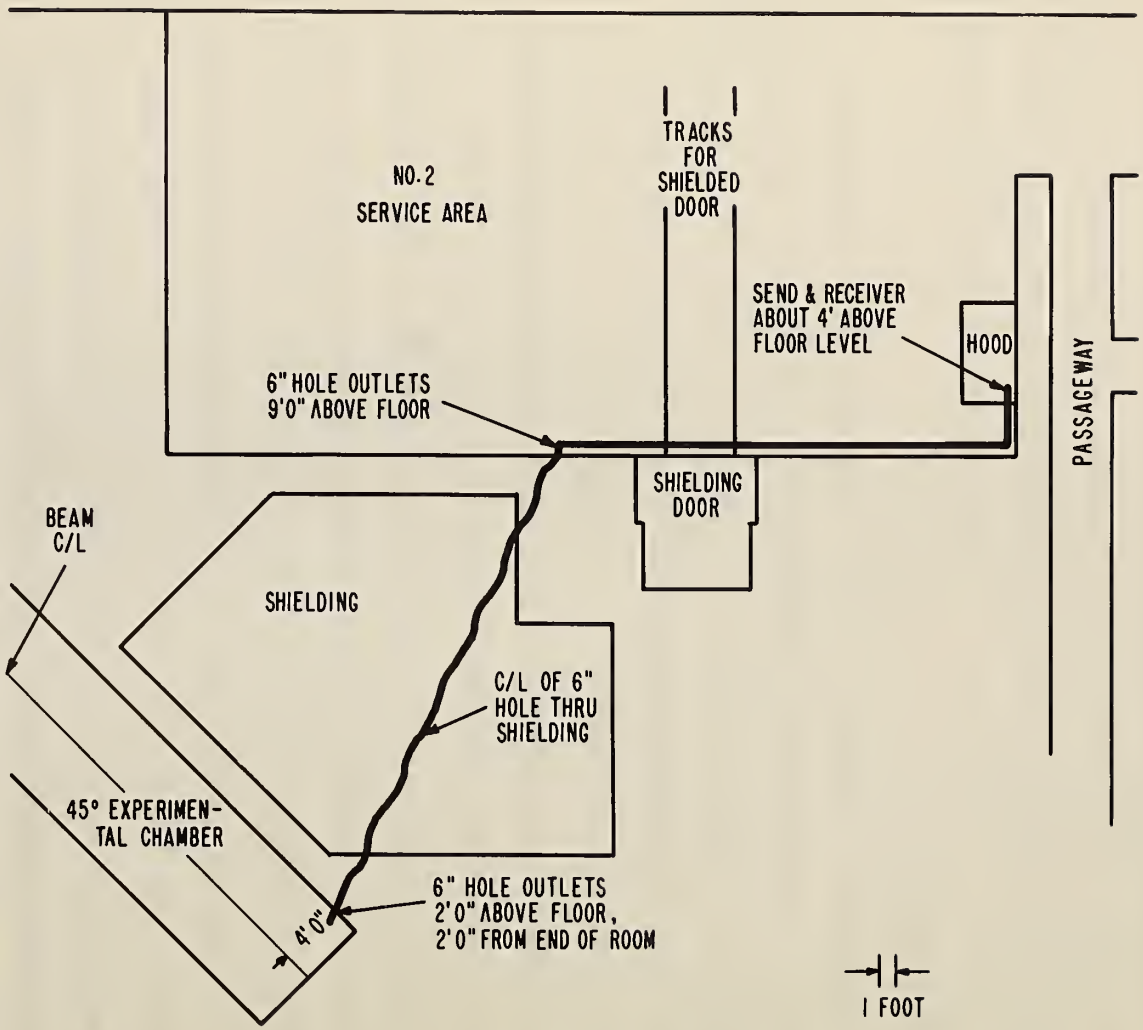

Figure 3. Linac pneumatic tube facility, NBS Radiation Physics Laboratory, Gaithersburg, Md.

power supply and a high voltage supply for an electron gun as yet to be purchased.

A high speed pulse height analyzer system has been purchased for activation analysis using very short-lived radioisotopes. The unit, model 24-1 manufactured by Radiation Instrument Development Laboratories has a total analysis time of 1 μs per pulse for channels 1 to 100 and an additional dead time of 0.01 μs per channel above channel 100 to channel 256.

(J. R. DeVoe)

D. Digital Computers

It is necessary to utilize electronic digital computation wherever possible in any scientific effort, because it minimizes errors and time of computation, reduces tedious computation, and creates an attitude in the user which, in a sense, promotes greater depth of scientific investigation. We believe that the proper system is user oriented with a minimum of intermediaries between the user and the machine. This reduces turn around time for computation and creates a very important man-machine interaction.

The problem was to determine the best arrangement for the specific needs of the section. Time sharing or multiplexing is now beginning to be feasible economically. The decision that had to be made was whether or not to purchase a small computer to store data from a series of pulse height analyzers and/or scalers on a multiplex basis. This seemed

to be attractive because money need be paid for only one memory as contrasted to that of one for each pulse height analyzer. In addition, this computer even with fairly limited storage capacity, could be used to do quite sophisticated computations. For our purposes we felt that the advantage of owning a computer would not be great since we could not benefit from progressive developments in computer technology. In addition, the uses of local small computer storage is most economical for handling data from many scalers and the whole process becomes increasingly inconvenient when using pulse height analyzers, especially under conditions of time coincidence (multi-parameter systems).

Our solution to the problem was made even less difficult by the availability of an on-line digital computer system. We have rented teletype stations which are connected via direct line through the regular direct dial network to a digital computer on a multiplex basis. This means that for just the cost of leasing a teletype input station, we had for practical purposes, the capability of the digital computer connected to the other end of the communication lines right in our laboratory. This allows us complete flexibility in being able to communicate with any digital computer that is capable of this type of multiplexing. Although the data transmission rate is slow at present (approximately 100 bits per second) it will be possible on the Federal Telecommunication System (to be operational

in early 1966) to transmit over broadband lines at a rate of 33,000 bits per second. This means that data storage can be done from any data collecting device onto computer compatible magnetic tape and the tape information transmitted at high speed to a computer center.

At present we have on-line capability to a G. E. 225 multiplexing computer in Phoenix, Arizona. This system using the G. E. computer was developed by the computer group at Dartmouth University and they have devised a language called BASIC (Beginner's All Purpose Symbolic Instruction Code) which allows an uninitiated user to accomplish simple machine digital computation within a matter of a few hours. This is a very important factor for introducing the power of electronic digital computation into a group which is unfamiliar with it. In addition, the language provides many advantages of FORTRAN with the exception of input and output format which is somewhat inflexible to date. The system has proved to work very well with high reliability in data transmission and it has quickly made itself an indispensable facility in our section.

Similar computer systems will be available in the near future in the Washington area.

We are hoping to be able to use this system for information retrieval, such as nuclide data, cross-sections, Mössbauer differential chemical shift data, and bibliographies on various subjects such as activation analysis, Mössbauer

Effect, and radioisotope techniques. In theory these data would be in storage at a computer center, and anyone with access to a teletype machine could contact this computer to interrogate the memory on the particular subject of interest.

(J. R. DeVoe)

2. INSTRUMENTATION

Progress has been made on construction of electronic equipment for the purpose of automating the handling of data produced by multi-channel analyzers that are used in activation analysis and Mössbauer spectroscopy. The major portion of the system (see abstract in section B) was presented before the International Symposium on Activation Analysis at Texas A & M University; the remainder of the system is to be completed within the next month. A final report of this system will appear in next year's progress report.

Of particular interest is the design of a frequency comparator using digital techniques. This device was designed for the optical interferometric Mössbauer Spectrometer, but a number of other applications are possible.

A. A Frequency Correlation Device Employing a One-to-One Digital Technique.

1. General Description of the Principle

This digital device utilizes an approach to the problem of frequency correlation which achieves a very high degree of precision and yet permits an extremely wide dynamic response. The characteristics of the device include high stability and require no critical adjustment of components. The output of the device provides an error signal to the frequencies. Of the two signals to be compared, one is usually considered to be an independent variable or reference frequency and the other a dependent variable or tracking frequency. When the

correlator is to be used in a frequency discriminating system the error signal outputs are integrated in bipolar form and used to control the dependent frequency in a feedback loop in order to restore the one-to-one correlation between the two frequencies.

In its simplest form this device is embodied in an electronic scaler or counter having a numerical capacity of a scale of four, with the four stable states defined as "-1", "-0", "+0", and "+1".

The basic concept requires that the electronic counting system be so designed that it will count either positively or negatively, (i.e. add or subtract) signals coming from the reference frequency and the tracking frequency, respectively. Sinusoidal signals are converted to pulses having the same frequency period. The counter must also be incapable of "overflowing", (i.e. the addition of too many pulses without an intervening subtract pulse, thus, entering a number greater than can be contained in the counter), and it must stay at the maximum count state without reverting to its zero state. Employing this system, one now interprets the output or state of the counter with the lowest count (-1) as being "too slow" and the maximum count (+1) as being "too fast".

One more requirement that the counting system must meet in order to perform satisfactorily in this application is the capability to suppress any action when two pulses arrive so close together in time that they cause confusion to the

counter. By eliminating both pulses with a coincidence circuit the state is left unaltered, exactly as though each count had been accepted.

In operation, when the tracking pulses are precisely matched in frequency to the reference pulses, the number contained in the center of the scale of four alternates between states "-0" and "+0". If the reference pulse rate increases slightly then pulses are added to the counter at a faster rate than they are subtracted and the scaler will alternate between the +1 state and the +0 state, generating a periodic error signal to slow the dependent frequency. When the reference pulse rate decreases slightly the pulses are subtracted too rapidly and the state of the scaler alternates between the "-1" state and the "-0" state generating an error signal to speed up the dependent frequency. Very large differences in frequency cause the system to perform in the same manner due to the non-overflow requirement of the scaler which will produce an error signal until the relative counting rates permit its return to the center of its range. If the pulses counted are each periodic in nature, then the range of the counter need only be a scale of four where the two middle states ("+0" and "-0") provide no correction signal. The application of this technique can be extended to non-periodic or randomly occurring pulses on either of the inputs. A one-to-one correlation is provided where the allowable excursion limits (i.e. the degree of

randomness) are determined by the number of scaling units between the two error limits. It is also possible to provide a progressive or step-wise proportional error signal by utilizing two or more of the extreme end numbers of the scaler and decoding these numbers in progressively increasing steps. Such a system will provide fine corrections for small errors and larger correction signals when a greater deviation occurs.

2. Description of the Circuit

Electronically the requirements for the scaler can be met either by an appropriately gated scale of four binary counter or by an "open" ring counter. A description of the gating circuitry for the binary counter is given below. (see figure 4)

Incoming pulses are supplied to the add and subtract lines and are first checked for coincidence by the coincidence detector. If a coincidence exists, both pulses are discarded by "inhibit-and" gates (a) and (b) and no further action takes place. If no coincidence is detected the pulse is then applied to gate (c) or (d) depending on whether it is to be added or subtracted. These gates are the non-overflow gates. "Inhibit" gate (c) will block an add pulse if (and only if) the two bistables are in states ($\bar{A} + \bar{B}$) as determined by gate (k). This would correspond to the "+1" defined above. "Inhibit" gate (d) will block a subtract pulse if (and only if) the two bistables are in states ($A + B$) as determined by

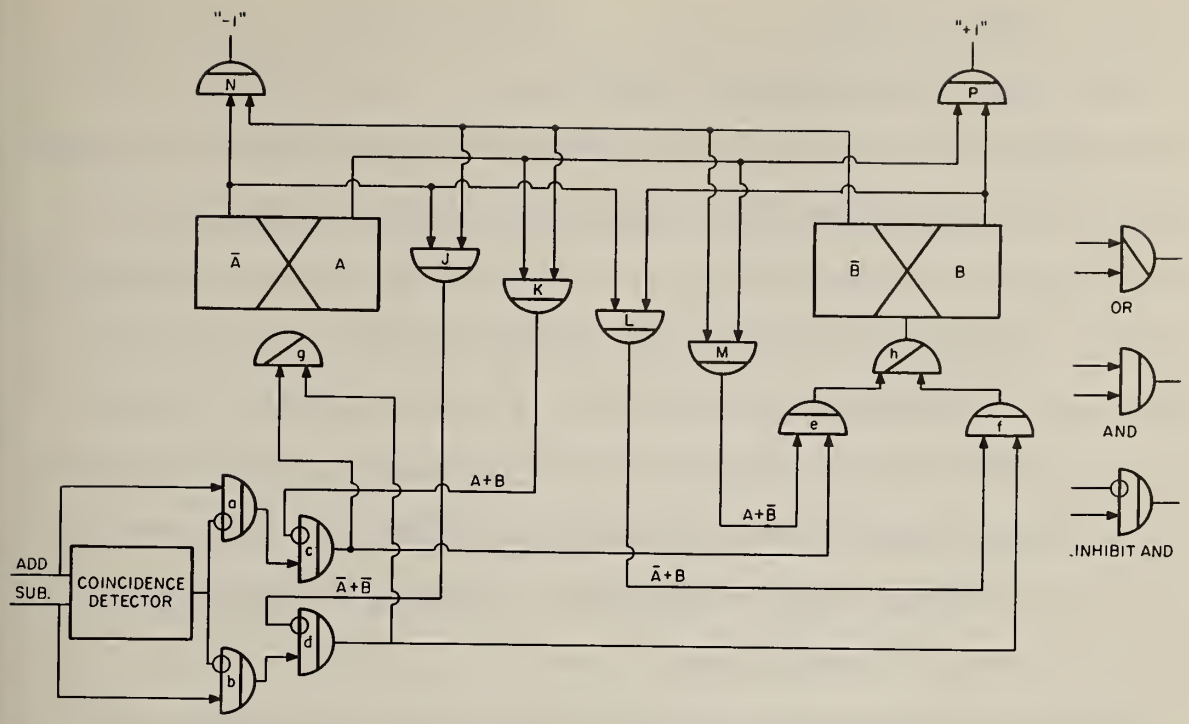

Figure 4. Frequency correlator logic diagram.

"and" gate (j). This corresponds to the "-1" defined above. Therefore, no action takes place when the scaler contains its most positive number and an add pulse is applied. Likewise, no action takes place when the scaler contains its most negative number and a subtract pulse is applied. "And" gates (b) and (m) control steering gates (e) and (f) which determine if the state of B bistable is to be changed when a pulse is added or subtracted. "Or" gates (g) and (h) combine the add and subtract pulses to drive bistables A and B. The error signals are generated by "and" gates (n) and (p) corresponding to the "-1" and the "+1" states of the counter.

3. Applications

The digital frequency comparator was developed to provide a velocity feedback control system in the course of designing a velocity drive for a Mössbauer spectrometer. The velocity of the system is represented by a sinusoidal signal derived from the output of a Michaelson interferometer such that the frequency is precisely proportional to the velocity. Therefore, to control the velocity it is only necessary to compare this velocity signal to a frequency standard and to provide a correction signal from the frequency comparator that is incorporated into a feedback loop.

The error signals produced by the scaler are each added (one positively and one negatively) to an integrator circuit, the output of which is amplified and becomes the actual control signal in the feedback loop. The velocity of the system can be varied merely by adjusting the standard frequency. The systematic velocity resolution of the spectrometer is determined by the charging time constant of the integrator circuit with respect to the signal frequency. For further details on the operation of this particular application of the comparator see the part of this report on Mössbauer Effect.

I wish to express my appreciation to Mr. Fillmer Ruegg for transforming these concepts to an operational device.

(R. W. Shideler)

B. Abstracts of Publications

The following is an abstract of a manuscript which was presented at the Texas Conference on activation analysis.

1. Interface Between Teletypewriter and Nuclear Instruments

Shideler, R. W., "Interfacing a Teletypewriter to Nuclear Instruments Used for Computer-coupled Activation Analysis", Proceedings of International Conference, "Modern Trends in Activation Analysis", Symposium, College Station, Texas, April 1965, to be published.

"In performing activation analysis using modern digital instruments the volumes of numerical data dictate that an expedient data handling system be used.

"The primary concern of this paper is to disclose the techniques and actual designs involved in the interfacing of a teletype to a digital multichannel pulse-height analyzer and to an automatic sample changer.

"Two separate designs are discussed for interfacing to the multichannel analyzers. The first design involves only minor changes to the analyzer.

"The second design provides interfacing with no modification to the standard analyzer, and includes the additional capability of reading precursor data from external units including a Time-of-Year clock and programmed data groups. These additional data are included in the output format

along with the analyzer data and serve to identify the data as well as to instruct the computer in its subsequent analysis.

"Of primary importance in this paper is a discussion of the merits and advantages to be found in adopting the use of the teletype machine as an input-output device. As well as providing typed copy, it will punch and read a paper tape coded in the new ASCII code. The automatic inclusion of precursor data and an appropriate readout format brings on-line computer operation to a reality."

The following is an abstract of a paper which was presented at the December 1964 meeting of the American Nuclear Society in San Francisco.

2. Through-port for Reactor

Shideler, R. W., and Meinke, W. W., "An Ultra High Speed Reactor-irradiation-transport System for Activation Analysis", Trans. Am. Nucl. Soc. Vol. 7, (1964)*

"Conventional pneumatic tube facilities on many research reactors deliver samples from positions near a reactor core to detectors or radiochemical hoods within a few seconds. These are suitable for work in activation analysis and nuclear chemistry with radioisotopes of half-lives greater than a few seconds. The half-life region below a few seconds, on the other hand, is almost completely unexplored from the

* This system will be placed in operation at the NBS Nuclear Reactor after transfer from the University of Michigan where it was constructed.

activation analysis point of view and only a few nuclear studies are available. Thus facilities for very rapid irradiation and delivery of samples from a nuclear reactor are of definite interest.

"We have designed a means of rapid and accurate determination of radioisotopes with half-lives of as little as a few milliseconds. The through-port of a conventional research reactor, the Ford Nuclear Reactor of the University of Michigan, was fitted with automatic equipment whereby a capsule containing a sample could be "shot" past the core of the reactor, through the shielding and into a detector for measurement. The sample moves at speeds as high as 1000 ft/sec, being in the region of the core for the order of 10 milliseconds. After a delay of another 10 milliseconds while traversing the shield it enters an orbit ring in which it spins around a scintillation detector as it slows to rest. Its decay is measured during this slowing process by a 400 channel pulse-height analyzer operating in the time mode as a "400 channel" scaler.

"The equipment used to perform these operations consists of a launching mechanism coupled through the small bore (1/2") transport tube running past the reactor core to the receiving mechanism or orbit ring. Mechanically the launching device, which is remotely operated and entirely self contained, is comprised of a holdup tank, a firing valve and a sliding breech loader with which the capsule is

introduced into the system. In operation the holdup tank is charged with helium gas to a predetermined high pressure from an external source. As this gas is quickly released by the specially designed firing valve it accelerates the capsule to the desired velocity. The orbit ring mechanism is comprised chiefly of an extension of the transport tube which closes upon itself to form a loop or torus. The sample coming down the tube from the reactor at a high velocity enters the orbit ring and follows a closed circular path or orbit. A 3" x 3" sodium iodide detector is situated inside the orbit ring and on a common axis to that of the torus providing a constant geometric relationship between the sample and the detector regardless of the sample position or velocity. The transport tube is a single length of thin walled aluminum tubing which for safety considerations was entirely contained in a heavy stainless steel tube of somewhat larger diameter open to the air at both ends of the through-port. This design entirely eliminates the possibility of pressurizing the hydrostatically-tight through-port tube which was water filled to maintain adequate shielding.

"Some difficulties were encountered with capsule container materials but it is possible to use polyethylene capsules at speeds of up to 500 ft/sec without undue problems. The system has proven satisfactory in operation and can be used for activation analysis in the region above a few milliseconds.

"Although the orbit ring concept was designed to be used with very high velocities, it need not be restricted to through-port systems and should be useful in any fast system where instantaneous counting is desired. This design should also prove applicable to pulsing TRIGA reactors, when the operation of the high-speed transport system is synchronized with the high-flux, short-duration pulse."

3. ACTIVATION ANALYSIS

Considerable effort has been placed in the past year on the design and development of an appropriate activation analysis system. Although much of this effort is directed toward the future potential of our capability, this group has for the first time contributed to the certification of a Standard Reference Material. This work was reported at the 1965 Texas A & M Conference on Activation Analysis. This marks the beginning of a program which will result in the production of standard materials of a high purity which have been analyzed for many different trace elements. Continual efforts are being made by many analysts to improve upon the precision of the activation technique but special effort will be made by this group to determine its accuracy for the elements in Standard Reference Materials. Where possible, this will be done by comparing the activation method with other trace analytical methods as well as by conducting a comprehensive analysis of the activation technique.

A majority of our initial systems developed is either completed or in a final stage of planning. Therefore, after the NBS reactor becomes usable in the spring of 1966 a maximum effort can be applied to the certification of trace elements in Standard Reference Materials.

Several interesting developments have occurred in the past few years which are enhancing the routine applicability of the technique. The lithium ion drifted germanium and silicon detectors promise to be of use in a variety of trace elemental analyses where the detector efficiency and consequently, the sensitivity need not be high.

The use of special nuclear reactions to accentuate the sensitivity of particular elements is becoming a useful technique. It is still necessary, however, to do a chemical separation after irradiating most samples, but in keeping with the analysts desire to automate analysis, it appears worthwhile to investigate the use of a group type of radiochemical separation that is amenable to automation.

During this past year, a number of analyses have been performed by the activation analysis group for other sections at NBS. At present we have had to limit the extent of these analyses to a few particularly interesting samples (e.g. argon in silicon, chlorine in polystyrene, etc.), some of which are described on the following pages, but it is our intention to accelerate this effort. As a step in this direction we have had so many requests for oxygen analysis

that we plan to install an automated system for this analysis using a Cockroft-Walton generator.

Progress in using the NBS Linac now depends upon when a beam will be available since most of our own facilities are installed in the Linac building.

In addition to completing the hardware requirements for activation analysis, each member of this group has been involved in a small training project such as the utilization of a digital computer, performance of coincidence counting systems, or the measurement of neutron fluxes.

As a result of the above efforts it is hoped that this group is well on its way towards providing the caliber of activation analysis that is required for the certification of Standard Reference Materials.

A. Determination of Trace Amounts of Argon in Silicon Single Crystals

1. Introduction

The important capability of neutron activation for nondestructive analysis recently came into focus when we were asked by Dr. R. D. Deslattes of the Inorganic Materials Division of NBS to analyze several extremely pure silicon crystals for the inert gas argon. These crystals were to be weighed by a special technique in a density determination having a standard deviation of 2 parts in 10^6. During preliminary work by Deslattes et al, the possibility of an interstitial argon contaminant was considered, since the

pure silicon crystals had been grown in an argon atmosphere. Electrical resistivity and other analytical techniques would not detect this impurity. The activation analysis technique was applied to the silicon to establish a lower limit of argon contamination.

The neutron activation analysis of argon utilizes the nuclear reaction $Ar^{40}(n,\gamma)Ar^{41}$ in which the argon-41 formed decays with a half-life of 1.82 hours and has a 1.29 MeV gamma ray (approximately 100% abundance). An interference arises, however, due to the reaction $Si^{30}(n,\gamma)Si^{31}$, which gives a nuclide of 2.62 hour half-life and emits a 1.27 MeV gamma ray (fortunately only of 0.07% abundance).

2. Experimental

The three silicon crystal samples which were given to us had already been etched and cleaned. Each sample was approximately 4 x 6 x 18 mm in size, weighed about 1.2 grams, and had been cleaved from the same crystal. They were irradiated separately for ten minutes in the pneumatic tube facility of the Naval Research Laboratory nuclear reactor at a flux of 10^{12} neutrons per square centimeter per second.* Each rabbit contained a sample in a polyethylene snap-cap vial and an argon standard containing 32 micrograms of argon. The polyethylene snap-cap vials, made by Olympic Plastics Company of Los Angeles can be obtained in several sizes and

---

* The Naval Research Laboratory reactor is a one megawatt swimming pool reactor, located in Southeast Washington, D.C.

and have been found to be relatively free from contamination, giving negligible radioactivity under these conditions in the gamma-ray region of interest. The argon standard was simply a known volume of air. The argon content of air (excluding water vapor) is 0.934 ± 0.001% by volume (45th Edition, Handbook of Chemistry and Physics, Chemical Rubber Company). Since the small snap-cap vial contained 1.5 milliliters of air, a simple calculation gave the amount of argon in a vial filled with air.

After irradiation, the silicon crystal was removed from the vial, "washed" with compressed nitrogen gas* to remove the surrounding radioactive argon-41 from the vicinity of the crystal due to air present in the vial, and placed into a second, identical snap-cap vial which had not been irradiated. This sample, and the argon standard, were then counted on a 3" x 3" sodium iodide (thallium activated) crystal with a 400 channel pulse height analyzer. The half lives were followed for twenty hours, and decay curves were calculated.

3. Results and Discussion

If all the 1.25 - 1.30 MeV gamma radioactivity of the sample was assumed to be from an argon impurity in the crystal, the actual count rate found would give a maximum argon impurity of 4.8 parts per million. However, the radioactivity of the sample was found to have a 2.78 hour

---

*Highly purified, water pumped compressed nitrogen was used.

half-life, which is in substantial agreement with the silicon-31 half-life of 2.62 hours, but not with the experimentally determined argon-41 half-life of 1.60 hours (literature value, 1.82 hours). To demonstrate this, figure 5 shows four decay curves. Curve (1) shows the experimentally determined silicon crystal decay curve. Curve (2) is a decay curve showing 60% of the total crystal radioactivity as pure silicon radioactivity (Si^{31}) (taken at zero time). Curve (3) is a decay curve of pure Ar^{41} (which is equivalent to 40% of the total silicon crystal radioactivity taken at zero time). Curve (4) shows the sum of the second and third curves, which is a hypothetical decay curve of 60% silicon radioactivity (Si^{31}) and 40% argon radioactivity (Ar^{41}). This fourth curve definitely shows curvature, and has an average half-life of about 2.4 hours. Thus, we feel it may be safely stated that if an argon impurity of 2 parts per million were present in the silicon crystal (or approximately 40% of the total silicon crystal activity), it could definitely be seen in the decay curve. Therefore, there is less than 2 parts per million of argon in the silicon crystal.

It should be possible by using least squares analysis [1] or a method of Fourier transform analysis [2] to improve the estimate. However, only an upper limit of this magnitude was desired for this analysis.

(D. A. Becker and G. W. Smith)

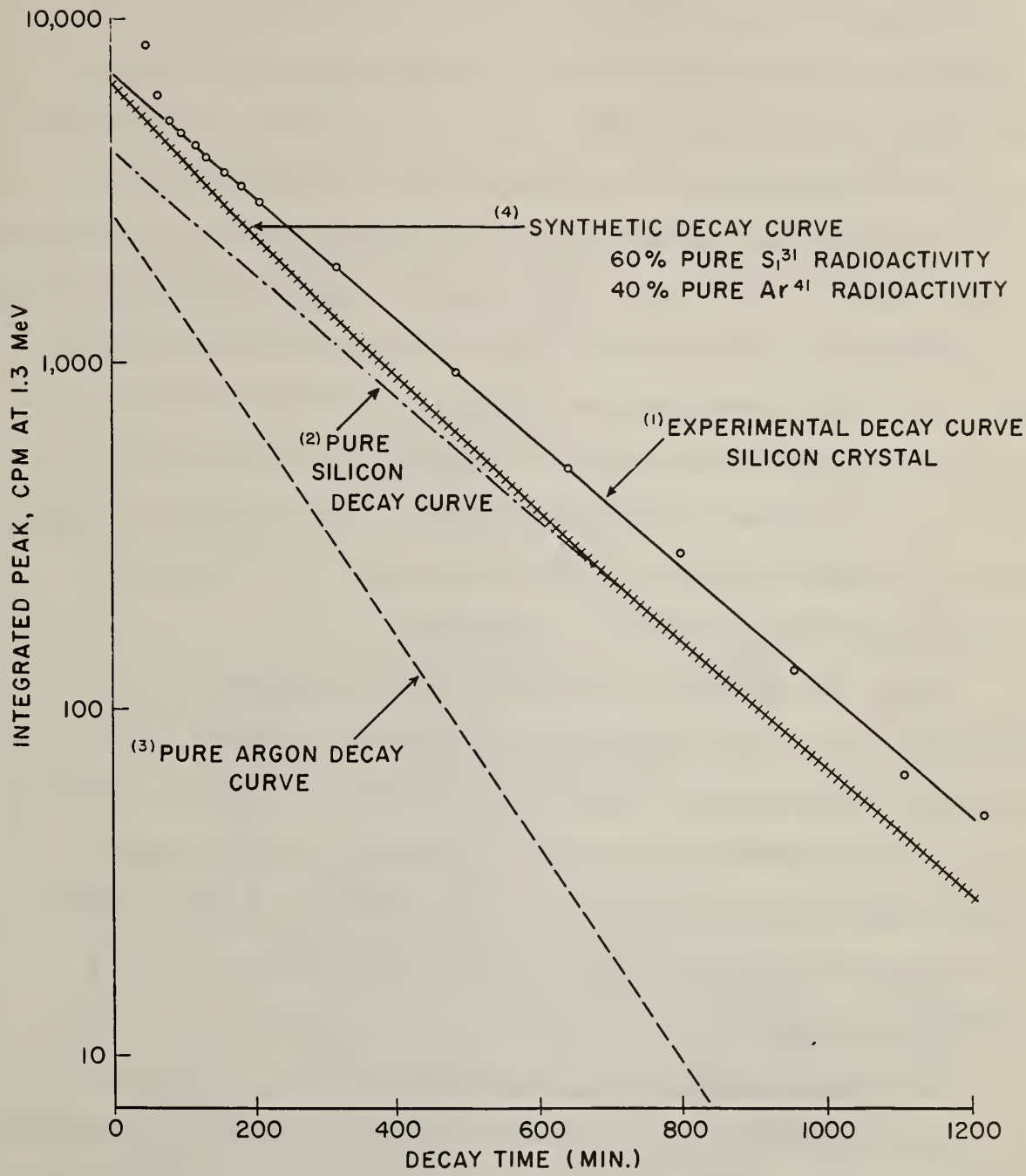

Figure 5. Decay curves of argon-silicon mixture.

B. Determination of Chlorine in Polystyrene

1. Introduction

The neutron activation analysis group received three samples of polystyrene from the Polymer Chemistry Section at NBS. The element to be determined was chlorine. The polymer was obtained by radiation polymerization of pure styrene monomer with small amounts of carbon tetrachloride present as a free radical scavenger. Each polymer molecule was believed to contain one, and only one, chlorine atom at the position where the chain reaction was stopped. If this were true, a chlorine analysis would give a simple and accurate determination of the average molecular weight of this polymer. Activation is particularly suitable here since the commonly occurring chlorine blank is eliminated.

Since the polymer was pure, little interference was foreseen, and a non-destructive method was chosen for the analysis. The nuclear reaction $Cl^{37}(n,\gamma)Cl^{38}$ (with a half-life of 37.3 minutes) was used, which gave two energetic gamma rays, one of 1.6 MeV and the other at 2.1 MeV. The 1.6 MeV gamma ray was used for this work because of its greater abundance.

2. Experimental

Approximately 60 mg samples (weighed to within $\pm$ 0.1 mg) of the polymer in the form of a fluffy powder was transferred from the original glass container to a tared polyethylene snap-cap vial. As a result of purification and separation

by freeze-drying, the fluffy polymer had a high static charge. It was necessary to place the polymer in its closed container near an active β^- source (Cu^{64}) for several days to reduce this charge before appreciable amounts could be successfully transferred. These snap-cap vials (see page 27) had been analyzed previously for contamination. A ten-minute irradiation at a flux of 10^{12} $n \cdot cm^{-2}$ sec^{-1} gave negligible amounts of chlorine-38. (figure 6)

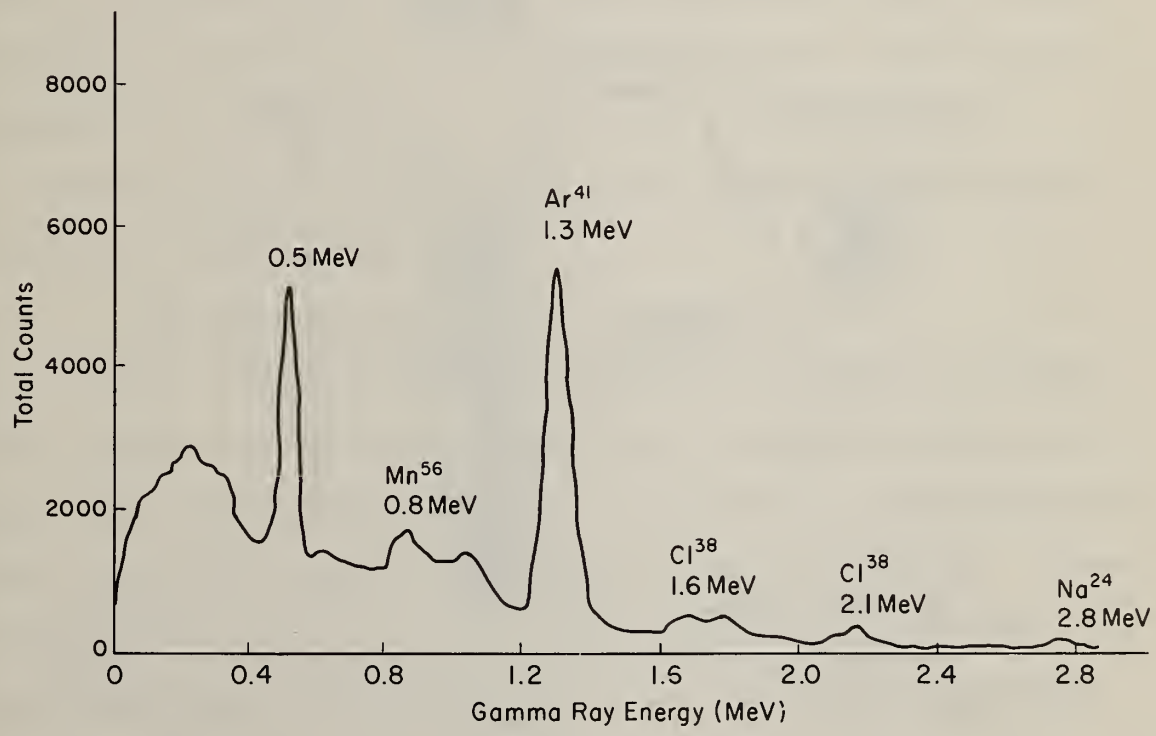

Figure 6. Gamma-ray spectrum of polyethylene snap-cap vial.

For a chlorine standard, a reagent grade hydrochloric acid solution was prepared and then standardized by the conventional silver chloride gravimetric procedure. Triplicate determinations gave a mean value of 4.224 ± 0.014 mg chlorine per ml solution. Two hundred fifty microliters of this standard solution was quantitatively transferred to a second snap-cap vial, and the vial heat sealed.* During irradiation, the vial containing chlorine standard was taped to the top of the polystyrene sample, as shown in figure 7.

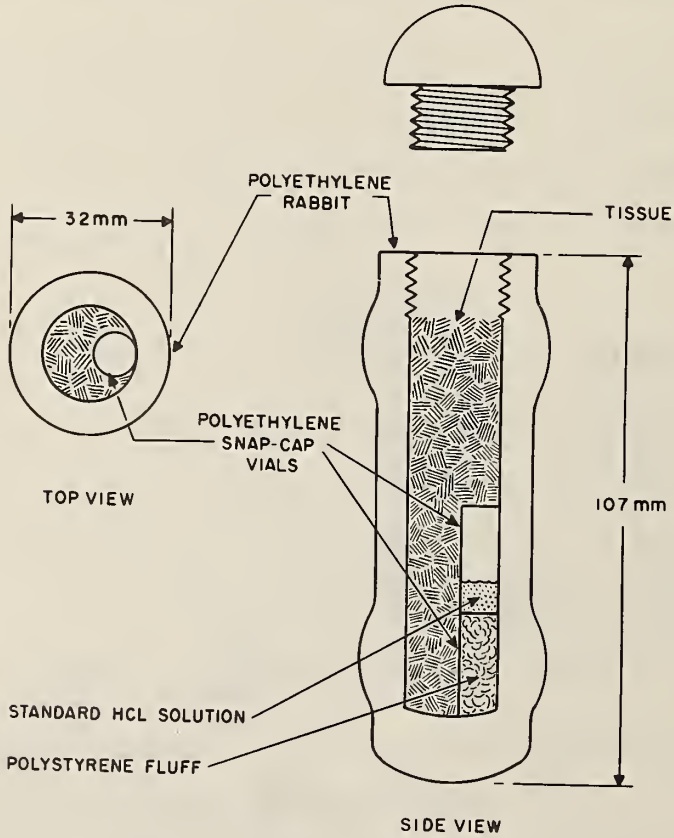

Figure 7. Sample placement in NRL rabbit; chlorine in polystyrene.

* The polyethylene snap-cap vials may be easily and quickly sealed by heating the top edge of the vial in a flame until soft, then quickly clamping the top together with a pair of stainless steel tongs. This produces an extremely strong, water tight seal.

The neutron flux variation as a function of distance from the bottom of the polyethylene rabbit was known so that appropriate corrections could be made. Cellulose tissues were used in the rabbit to keep the vials from changing position.

The irradiations were made in the pneumatic tube facility of the Naval Research Laboratory Reactor, Washington, D.C., for a period of 10.0 minutes at a thermal neutron flux of approximately 10^{12} neutrons per square centimeter per second.

After irradiation, the sample and standards were counted using a 3" x 3" sodium iodide (thallium activated) crystal and associated scintillation spectrometer and pulse height analyzer. The 1.6 MeV peak of chlorine-38 was used for the analysis by comparing the counts per unit time (after subtracting background) of the sample and standards under identical counting conditions.

3. Results and Discussion

The data for the chlorine analyses are given in table 3. The polymer samples ranged from 0.14 - 0.87% chlorine, which gave count rates of approximately 15,000 to 90,000 integrated peak counts per minute immediately after irradiation. These count rates were found to be more than adequate for the analysis, and delays of up to several half-lives could be tolerated for most samples without undue concern.

A small counting geometry correction was necessary between the polymer samples and the solution standards, since they did not fill the same volume of the snap-cap vial. This

Table 3. Results of chlorine determination.

Sample No.	Percent Cl^-	Average[a] percent Cl
1	0.43	
	0.38	0.42 ± 0.02
	0.44	
2	0.46	
	0.48	0.47 ± 0.01
	0.48	
3	0.13	
	0.15	0.14 ± 0.01
	0.13	
4	0.22	0.22 ± 0.01
	0.22	
5	0.40	0.40 ± 0.01
	0.39	
6	0.90	0.87 ± 0.05
	0.84	

[a] ± values are standard deviation of the average.

correction was easily determined by successive dilutions in the snap-cap vials of a small amount of a high specific activity radioisotope with an appropriate gamma ray energy, and counting the vial after each dilution. An experimental curve was thus obtained of the counting efficiency versus sample height in the snap-cap vial (figure 8) to provide the appropriate correction. This correction, which was not linear and was valid for our geometry only, constituted approximately 2% per millimeter of sample height.

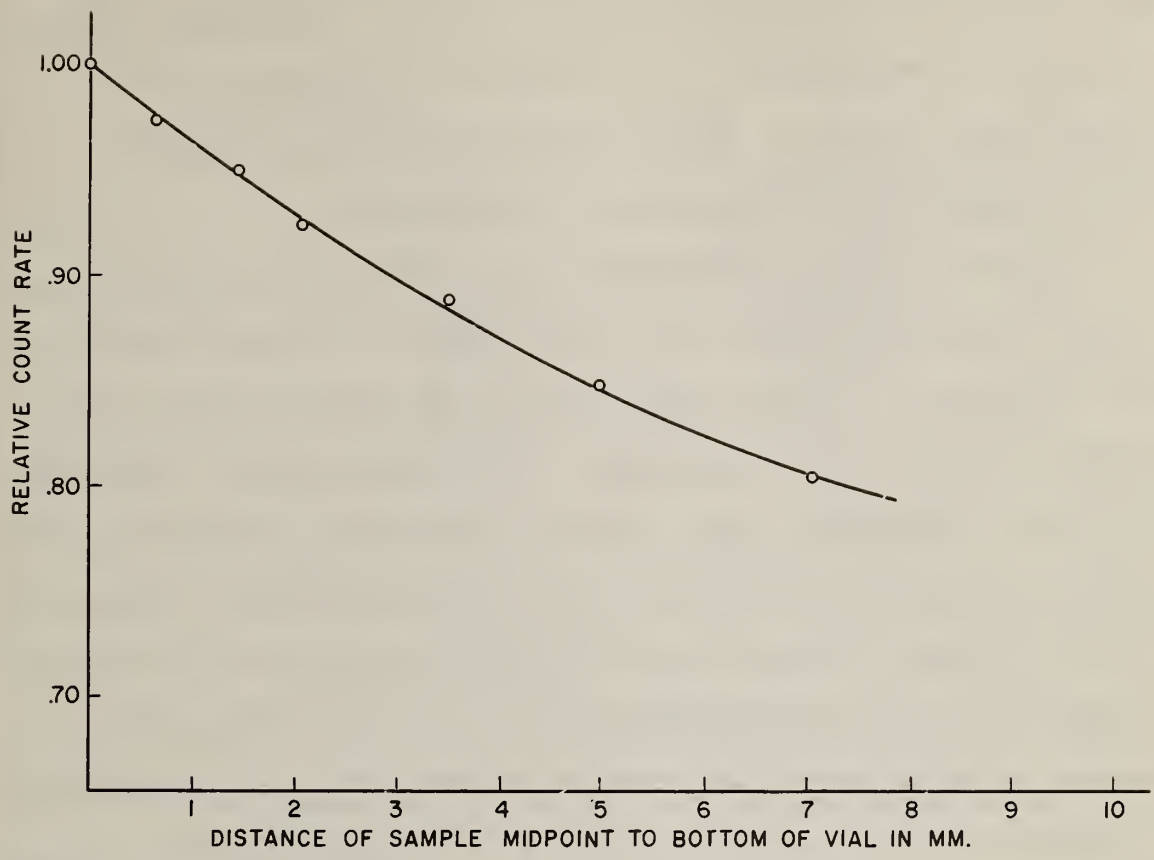

Figure 8. Variation of count rate with sample size.

(D. A. Becker and G. W. Smith)

C. Determination of Hafnium in Zirconium and Zircaloy Standard Reference Materials

1. Introduction

The Radiochemical Analysis Section was assigned seven Standard Reference Samples of zirconium and zircaloy for the analysis of trace amounts of hafnium. The samples (NBS

Standard Nos. 1212a, 360a, 1215, 1210, 1211, 1213, and 1214) were in the form of metal turnings, and had previously been shown to be homogeneous. In addition to hafnium in the concentration range of 90-470 ppm, the samples contained small amounts of twenty-five other elements.

The trace level determination of hafnium in zirconium matrix is a particularly difficult analysis by most analytical techniques. Since they both are in group IV B of the periodic chart, they have great similarity in their chemical behavior. Therefore, many chemical analytical techniques are difficult to perform. However, since neutron activation analysis depends entirely on the nuclear structure of the isotopes of hafnium and zirconium, it is found that small amounts of hafnium may be readily determined in the presence of large amounts of zirconium and most other elements.

The hafnium analysis utilized the nuclear reaction Hf^{178} (n,γ) Hf^{179m}. The hafnium-179m has a half-life of only 19 seconds, which is shorter than that of most other radioisotopes formed, and therefore makes possible the nondestructive analysis of the sample. The stable isotope, hafnium-178, has a high isotopic abundance (27.1%) and a high cross section for formation of the hafnium-179m (50 barns). In addition, the hafnium-179m decays with a 217 keV γ-ray (100% abundance) which does not undergo internal conversion. However, this radioisotope is only useful for activation analysis if some kind of rapid transfer system is available for quick delivery

delivery of the sample from the nuclear reactor to the counting apparatus.

2. Experimental

A 100 mg sample (weighed to within ± 0.1 mg) was sandwiched in cellulose tape and placed flat on the bottom of a large size polyethylene snap-cap vial (figure 9). These vials had previously been found to be relatively free from radioactivity in the energy region of interest for these short term irradiations. The vials had tissue forced inside on top of the samples to eliminate any possibility of sample movement. A weighed copper foil flux monitor (a disk approximately 4 mm in diameter and 20 mils thick in the range of 20 mg, weighed to a 0.1 mg standard deviation, single determination) was taped to the bottom of the snap-cap vial exactly in the center.

The sample vial with attached flux monitor was placed in a polyethylene rabbit (figure 9) and irradiated for 0.50 minutes in the Naval Research Laboratory nuclear reactor pneumatic tube system. In this particular rapid transfer system, the rabbit is delivered from the irradiation terminal in the reactor to a lead-lined receiving box just outside the radiochemical laboratory in about seven seconds. The time of ejection of the sample from the core is known to within ± 1 second.

After delivery of the irradiated rabbit to the laboratory, the sample was quickly removed from the rabbit and the copper

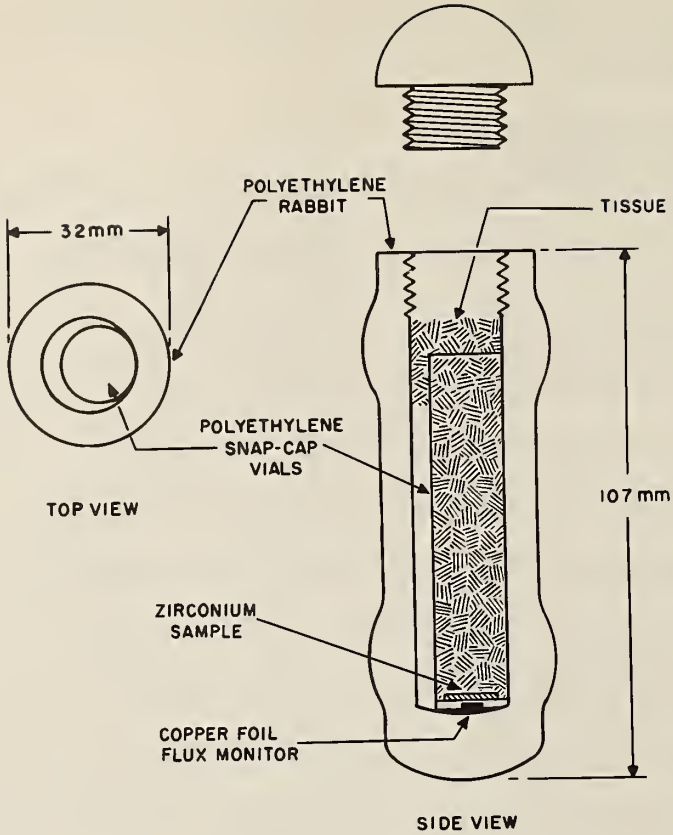

Figure 9. Sample placement in NRL rabbit; hafnium in zirconium.

foil flux monitor separated from the sample. The counting equipment used was a standard 3" x 3" sodium iodide (thallium activated) scintillation detector coupled to a RIDL-model 34-12B 400 channel pulse height analyzer. To expedite readout, a 100 channel quadrant of the analyzer was used, with an energy spread of 0-0.5 MeV. Rapid readout was achieved using a Franklin model 1040-D printer, which has readout capabilities on paper tape of approximately 40 channels per

second. The readout was adjusted to print 100 channels in 0.10 ± 0.01 min. Using this system a recycled 0.40 minute count plus 0.10 minute readout of 100 channels took exactly 0.50 minute per spectra, as measured over an eight count period.

The samples were compared to a pure hafnium oxide standard. Purity of 99.9% HfO_2 was verified by NBS spectrographic and gravimetric analysis. Varying quantities of a standard solution of this hafnium oxide (1.45 μg Hf per 1.00 μl solution) were used to obtain a calibration curve of micrograms hafnium versus integrated peak counts per minute. Known amounts of this standard solution were deposited on approximately 12 mm diameter disks of filter paper (five thicknesses) and allowed to dry. These standards were then enclosed in cellulose tape as were the samples.

3. Results and Discussion

The data for these analyses are shown in table 4. Five analyses using different portions of sample were run on each Standard Reference Material. The average values and the standard deviation of these average values are shown.

The data found in table 4 have a small relative standard deviation. ranging from about 0.4 to 2.0% of the average.

The Hf^{179m} isotopic purity was verified by plotting decay curves of the samples and the pure hafnium standards, using the integrated 217 keV hafnium-179m peak. The half-life determined was 0.317 minute and was the same for both

Table 4. Results of hafnium analysis.

Standard Reference Material No.	Hafnium Concentration (ppm)	Average ± S_d of Average
1212a	277	
	280	
	280	278 ± 1
	278	
	277	
360a	92.8	
	94.0	
	93.6	94 ± 0.5
	94.5	
	95.7	
1215	467	
	463	
	452	471 ± 7
	491	
	480	
1210	87	
	88	
	85	91 ± 3
	97	
	97	
1211	146	
	140	
	145	144 ± 1
	144	
	144	
1213	88.8	
	93.2	
	87.6	89 ± 1
	86.0	
	91.6	
1214	189	
	190	
	183	192 ± 3
	200	
	196	

sample and standard within experimental error. This also agrees well with the literature value of 0.32 minute (19 seconds). Under these conditions, no gamma ray interferences were noted.

The copper foil flux monitors for the samples and standard were allowed to decay until the 5.1 minute copper-66 activity had disappeared, at which time the 0.51 MeV annihilation peak from the positron decay of 12.9 hour copper-64 was counted and corrected for decay. These values were then used for flux normalization of the hafnium count rates.

Neutron self-shielding corrections were not necessary since the hafnium was the only significant neutron absorber present, and the concentration difference between samples and standards was small.

(D. A. Becker and G. W. Smith)

D. Determination of the Neutron Flux Spectrum for the NRL Pneumatic Tube System

1. Introduction

Until recently, the pneumatic tube system at the Naval Research Laboratory had received minimal use, and thus little was known about the irradiation conditions at the reactor terminals. Our usage has been limited to the north "rabbit", and these data apply only to this irradiation position.

Knowledge of the neutron flux spectrum is necessary for the choice of optimum irradiation conditions. Data on the cadmium ratios and fast neutron distribution in a variety of

irradiation positions allow judicious choice of a position offering maximum sensitivity with a minimum of interferences.

Information about the vertical and horizontal gradients of the neutron flux within a sample position are important, especially if the sample size is varied. Fortunately, in most cases the variation in flux within the sample position is quite small. However, the NRL pneumatic tube terminals are positioned on a graphite ledge just above the reactor core, so that a significant variation of the thermal neutron flux would be expected.

2. Experimental

The materials used for the neutron flux measurements consisted of thin foil disks (1 inch diameter) of the elements gold, nickel, magnesium, copper, and aluminum (see table 5). The gold and copper foils were used with and without 20 mil interlocking cadmium covers (foils and cadmium covers were obtained from Reactor Experiments, Inc.). For irradiation, the foils were placed in a flat position on the inside bottom of a polyethylene rabbit and held in that position by cellulose tissues. The foils were counted on a 3" x 3" NaI(Tl) crystal with an associated pulse height analyzer. The counting position was calibrated by means of NBS radioactivity standards (Radioactivity Section, National Bureau of Standards) for the range of each photon energy. Thus, after determination of the disintegration rate of these foils, and knowing the nuclear constants for each element,

Table 5. Nuclear data for activation foils.

Foil	Nuclear Reaction	Product Half-life	Threshold Energy	Threshold σ barns
Au	$Au^{197}(n,\gamma)Au^{198}$	2.70d	below 0.4 eV[a]	96[a]
Ni	$Ni^{58}(n,p)Co^{58}$	71.3d	2.9 MeV	0.092
Mg	$Mg^{24}(n,p)Na^{24}$	15.0h	6.3 MeV	0.048
Al	$Al^{27}(n,)Na^{24}$	15.0h	8.1 MeV	0.11
Cu	$Cu^{63}(n,\gamma)Cu^{64}$	12.9h	below 0.4 eV[a]	3.9

[a]The integral neutron flux below 0.4 eV was found by subtracting the radioactivity due to a cadmium covered foil from the radioactivity due to a bare foil. This gave the radioactivity below the cadmium cutoff, i.e., 0.4 eV.

the integral neutron flux above the energy threshold may be calculated using the standard neutron activation calculations.

The determination of the flux gradient within the polyethylene rabbit was made by using a thin cylinder of polyethylene to which small (3/16 inch diameter) copper foil disks had been attached, both circumferentially and vertically. After irradiation, the 5.1 min. copper-66 in the foils was allowed to decay and the 0.51 MeV peak of the 12.9 h copper-64 was counted under reproducible conditions and corrected to the time it was removed from the reactor.

3. Results

The integral neutron spectrum of the north pneumatic tube terminal is shown in figure 10. With it is shown the unmoderated prompt neutron uranium-235 fission spectrum [3].

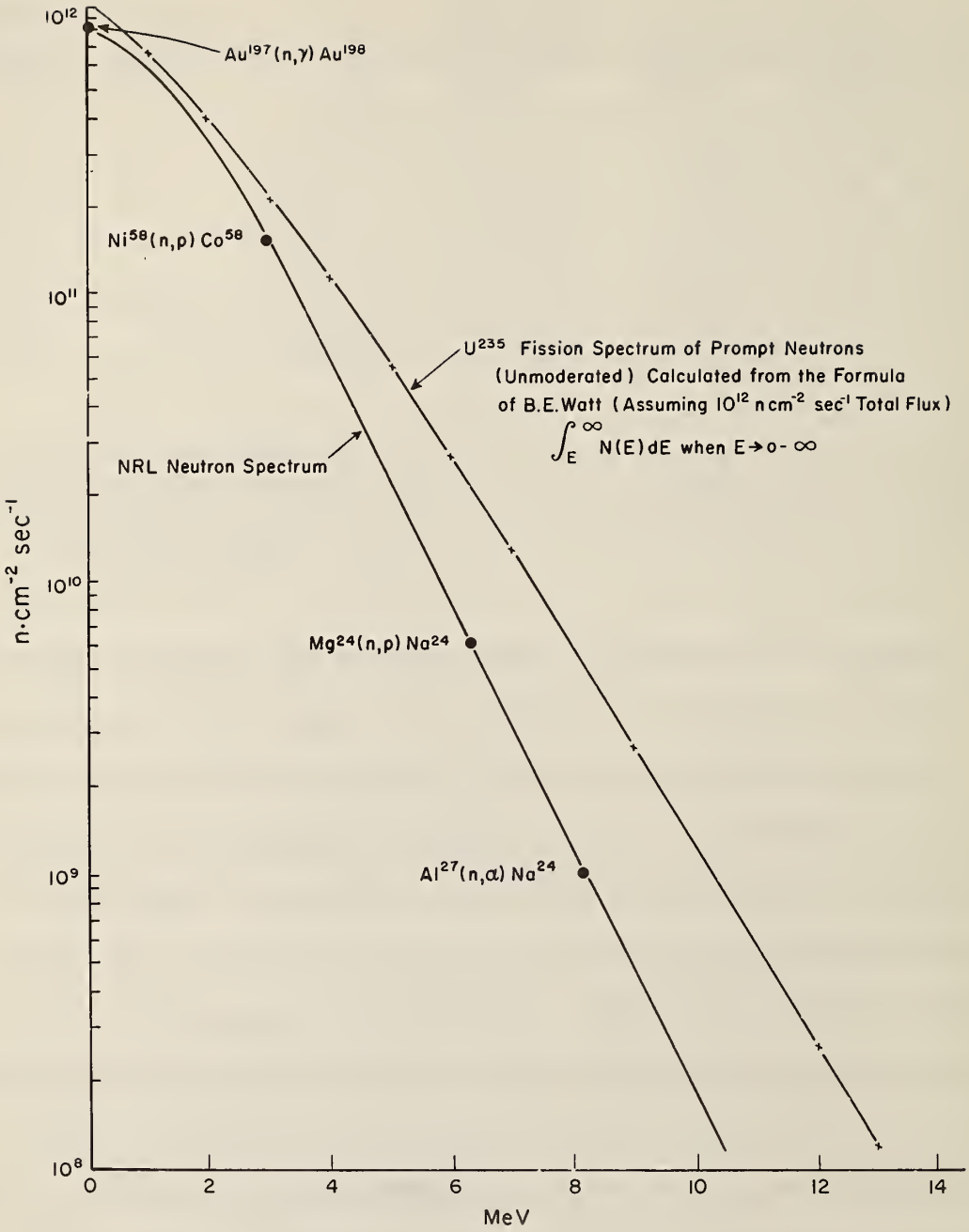

Figure 10. Determination of integral neutron flux in NRL pneumatic tube.

The thermal neutron flux (i.e. the flux produced by neutrons of energy below the cadmium-cutoff of approximately 0.4 eV) was calculated by taking the radioactivity of the gold foil (total radioactivity minus the radioactivity produced with cadmium shielding), correcting to the disintegration rate at zero time (including a self-shielding correction), and using the equation:

$$f = \frac{A_1}{\sigma_{th} N \left(1-e^{-\lambda t}\right)}$$

where f = thermal neutron flux in $n \cdot cm^{-2}\ sec^{-1}$

A_1 = radioactivity of the gold foil in dps

σ_{th} = thermal neutron cross section of gold-197 in barns

N = number of gold-197 nuclei in the target

λ = decay constant of gold-198

t = time of irradiation, in seconds

The result of two determinations gives values of 0.83×10^{12} $n \cdot cm^{-2}\ sec^{-1}$ and 0.84×10^{12} $n \cdot cm^{-2}\ sec^{-1}$ for the thermal neutron flux.

The gold-cadmium ratio [Cd(Au)R] is defined as:

$$Cd(Au)R = \frac{\text{Disintegration rate of bare gold foil}}{\text{Disintegration rate of cadmium covered gold foil}}$$

where both radioactivities are corrected to zero time. The results of two determinations of the gold-cadmium ratio gave 10.8 and 11.2 for an average gold-cadmium ratio of 11.0. The copper-cadmium ratio (calculated in the same way only using a copper foil) gave a copper-cadmium ratio of 63.5.

A plot of the neutron flux vs. height in the polyethylene rabbit may be seen in figure 11. These data yield a flux gradient value of 0.68% per millimeter of average sample height in the rabbit. The side-to-side gradient was 0.37% per millimeter over the 12 mm diameter of the rabbit.

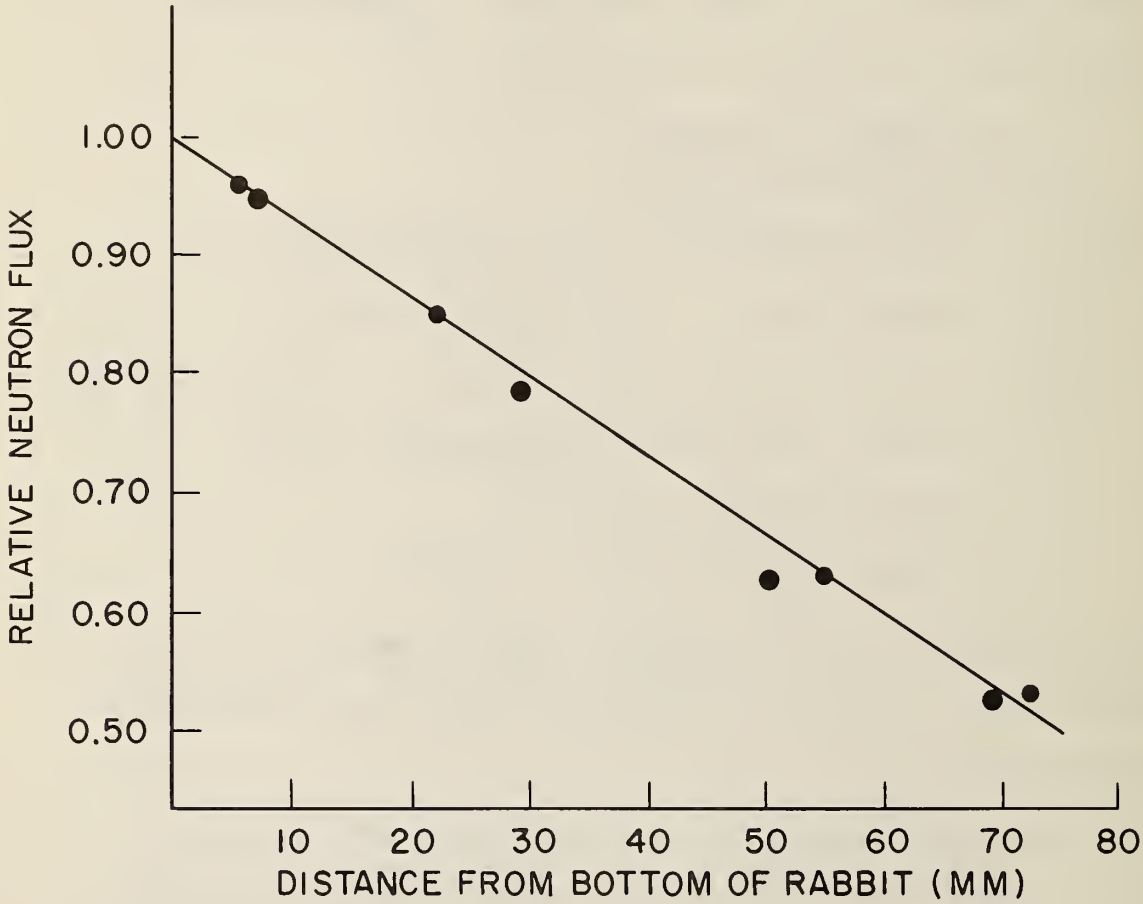

Figure 11. Flux dropoff versus height for NRL pneumatic tube.

4. Discussion of Results

The general shape of the neutron flux spectrum determined is quite similar to the theoretical shape as calculated

by B. E. Watts [3], as shown in figure 10. As expected, the slope is slightly greater since considerable moderation is achieved by means of the cooling water shielding, the graphite in the ledge below the rabbit terminal, and by the polyethylene of the rabbit itself.

The gold-cadmium ratio of 11 agrees with NRL's estimated value. This is a relatively high gold-cadmium ratio compared to the in-core ratio of 2 or 3. Thus, the pneumatic tube facility would be the preferred position for thermal neutron activation. The in-core irradiation positions would be preferred for fast neutron activation and high-sensitivity thermal neutron activation if fast neutron reactions do not cause interference. The numerical difference between the gold-cadmium ratio and the copper-cadmium ratio determined with the same neutron flux spectrum illustrates the ambiguity of using the term "cadmium ratio" indiscriminately, without reference to the element with which it was determined.

The plot of the vertical neutron flux drop off is a straight line, so that, if necessary, a suitable correction may be made for various sample sizes. However, it is better to control the irradiation conditions so that all samples and standards are at the same average level in the polyethylene rabbit. A numerical correction for side-to-side flux variation is difficult, since the rabbit turns while moving. Therefore, efforts must be made to keep the sample as close to the center line of the rabbit as possible. However, by

affixing the flux monitor to the base of the sample container, the need for side-to-side correction may be eliminated for samples of small diameter.

(D. A. Becker and G. W. Smith)

E. Activation Analysis with the NBS Electron Linear Accelerator

A forty kilowatt microwave linear electron accelerator (Linac) is being installed in Building 245 at the NBS Gaithersburg, Maryland facility. By utilizing suitable radiators to intercept the electron beam, large quantities of high energy bremsstrahlung can be generated. These high energy photons can induce photonuclear reactions in many elements, giving rise to radioactive products. The thermal neutron activation analysis of all of the elements has been reviewed. A number of elements, including carbon, nitrogen, fluorine, niobium and lead, can be determined by activation analysis more accurately, more rapidly, or to a greater sensitivity with photon irradiation than with thermal neutron activation. We have made estimates of sensitivities that can be obtained using the Linac and it appears that it may be possible to go below 1 μg in the case of lead, and down to perhaps 10^{-2} μg for the other mentioned elements. The possibility of using chemical separation techniques, based on existing methods, are being reviewed.

In addition to the possibility of using the photonuclear reactions, metastable isomers of elements such as germanium,

zirconium, lead, bromine, tungsten, gold, barium, cadmium, strontium, and indium can be produced by irradiation with photons below the threshold for a photonuclear reaction. By using gamma rays of energy below 6 MeV only the radioactivities from these isomers will be produced. Although cross sections for production of these isomers are not well known, they are believed to be small. Therefore, the method would not be very sensitive, but should be very specific for the elements indicated.

The design and installation of associated equipment is underway. These include fume hood, heat exchangers, beam trap and pneumatic tube transfer system for utilization of short-lived radioactivities. Several concepts in radiation targets are being examined and a suitable one for our experiments is being designed.

(G. J. Lutz)

F. Utilization of Computers in Activation Analysis

An important aspect of the activation analysis program is the ability to conveniently handle the large quantities of data that the multi-channel analyzers are capable of producing. Even more important is the ability of the analyst to treat the data in an ever increasing comprehensive manner through the use of digital computers. In addition, this capability allows the analyst to perform a wide variety of computations that will result in a better analysis.

1. Computer Simulation of Activation Analysis

The first computer technique used is based on the OPTIMIZE method of Isenhour and Morrison [4]. One may, in some instances, by judicious selection of irradiation and decay times, be able to count the gamma photopeak of the radioisotope of interest relatively free from interference from other radioactivities. This program determines these optimum times of irradiation and decay for activation analysis of any element in a mixture. The original paper should be consulted for details. We have utilized this program in several analyses.

a. Aluminum in Steel Samples. It was desired to determine aluminum in NBS Standard Reference Material 14e by the reaction $Al^{27}(n,\gamma)Al^{28}$. The qualitative and semi-quantitative analyses were available for this metal, as well as the thermal neutron flux, minimum acceptable radioactivity, and minimum and maximum times of irradiation and decay. These data were put into the computer. The computer output included a measure of the maximum signal to noise ratio which ranges from 0 to 1.0 for the Al^{28} photopeak. In this sample the ratio was 0.363. It was verified that the major interference was due to Mn^{56}, produced from the (n,γ) reaction on Mn^{55}. When the manganese data were excluded from the computations, the ratio was 0.998. Thus the analyst has several options in doing this determination. He may do a quick separation of manganese after irradiation. He may

follow the decay in the energy range of interest and resolve the components in this manner or he may do a spectrum stripping of the interfering nuclide.

b. Silicon in phosphate rock. It was desired to determine silicon in NBS Standard Reference Material 120a (phosphate rock) by inducing the reaction $Si^{29}(n,p)Al^{29}$ utilizing reactor neutrons. A computer analysis indicated that a number of radioactivities would interfere with the detection of Al^{29}, and therefore, a rather complete chemical separation would be required.

2. Analysis of Multicomponent Gamma-Ray Spectra. A number of least squares and simultaneous linear equations methods for calculating the contribution of individual radionuclides in a multicomponent pulse-height spectrum have been described [5]. One of these techniques described by Nicholson, et. al. [6] has the distinct advantage of allowing the reduction of the spectrum into a set of channel groups for the computation. The proper selection of groups of channels reduces errors introduced by gain change or zero drift. This program also permits the analysis of time dependent spectra.

The main disadvantage of the technique is that it nullifies the inherent resolution in a NaI(Tl) detection system. The method has the effect of reducing substantially the number of channels of data. This results in a loss of precision in the estimation of relative amounts of each component present.

However, it is felt that for routine analysis of practical samples, the minimizing of errors due to gain change or zero drift, which may occur during counting and may amount to a substantial fraction of a channel or more, is of great enough importance that the loss of resolution can be tolerated.

This technique is currently being tested with synthetic samples and will be included in the activation analysis capabilities of the group.

(G. J. Lutz)

G. A Gamma-Ray Spectrometer Utilizing a Beta-Gamma-Gamma Sum Coincidence Technique

In activation analysis the number of radioisotopes produced by irradiation of the sample is often large. In order to perform a successful qualitative and quantitative experiment, the analyst must be able to measure accurately the radiation of the desired radionuclide. This may be accomplished by chemically separating the radioisotopes of a given element and then by using the gamma-ray spectrometer to measure the radiation from the desired radioisotope. The complexity of the radiochemical separation can be reduced and, in many cases, the sensitivity of the technique increased by the use of coincidence counting techniques. If the desired radioisotope decays by beta followed by at least two gamma rays in cascade, and the sum of the gamma rays is analyzed in the spectrometer, a very high degree of discrim-

ination can be obtained. This system is closely patterned to one that has been developed by R. W. Perkins and R. E. Connally [7,8] of the Battelle Research Laboratories, Hanford, Washington.

1. Detector Systems

The detection system that is used is shown diagrammatically in figure 12 and pictorially in figure 13. Two NaI(Tl) single crystals 8" diameter x 4" thick are placed as close as possible to a plastic scintillator-phototube array which

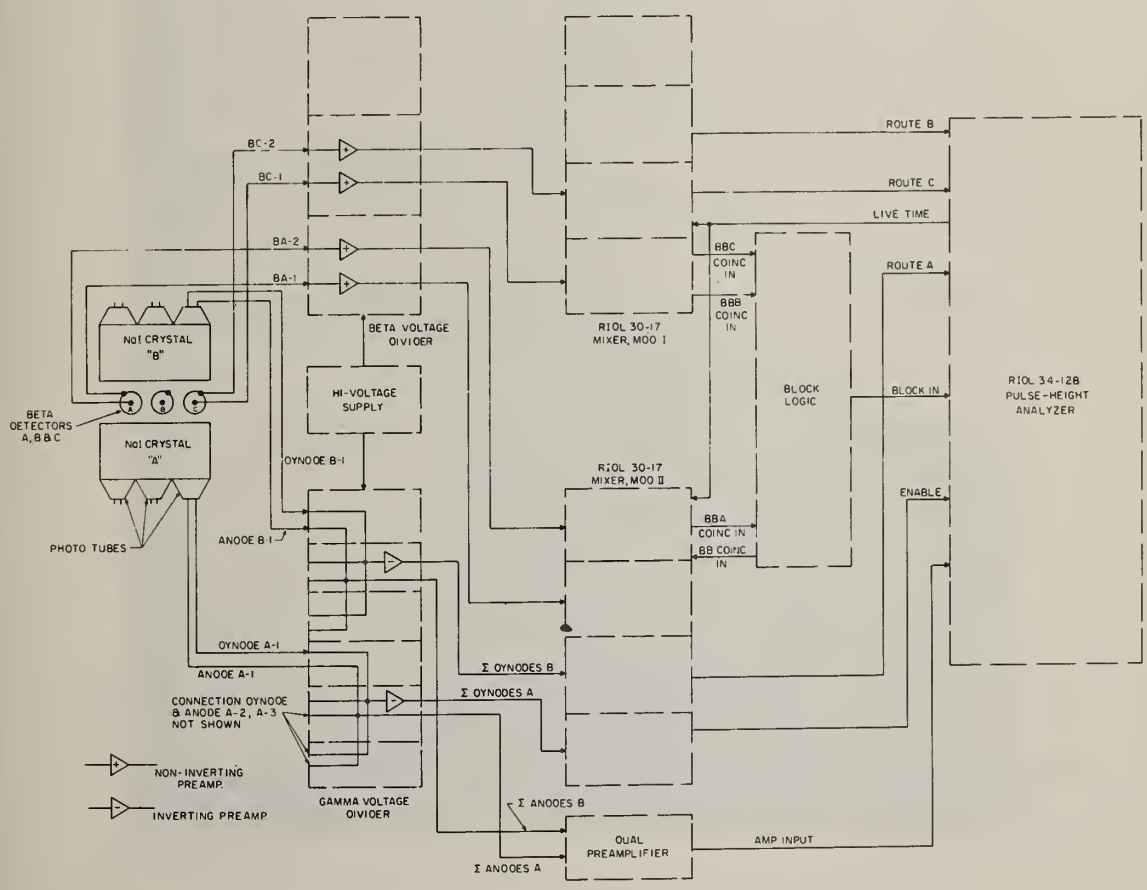

Figure 12. Diagram of connections for βγγ coincidence sum spectrometer.

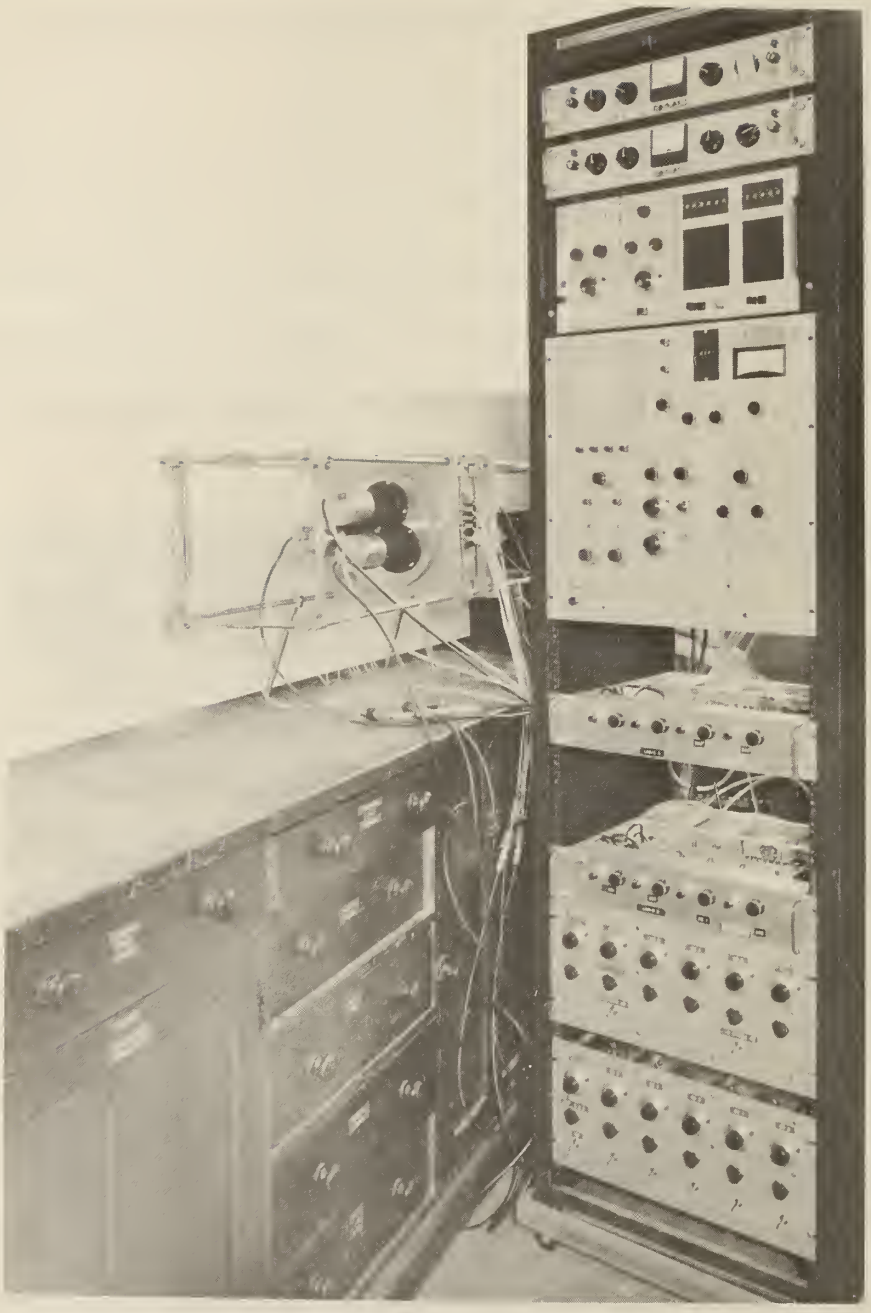

Figure 13. Electronic apparatus for β-γ-γ coincidence sum spectrometer.

is shown in figures 14 and 15. The sample is placed in the recess of the plastic scintillator and a plastic scintillator cap is placed over this and is held on with a seal of optical coupling. Two 3/4-inch phototubes are optically coupled to the scintillator inside a stainless steel tube. The phototubes are then held in place by means of black plastic tape which provides a light tight seal.

The signal from each phototube is passed through a non-inverting preamplifier to the input of a four channel mixer. A schematic of the high voltage divider and preamplifier assembly is shown in figures 16 and 17. These preamplifiers are plug-in units which have been designed on circuit boards. A schematic of the wiring in the beta detector is shown in figure 18. A tenth dynode wire is available on these tubes but is not used for this application. The anode signal is then used to generate the appropriate coincidence logic.

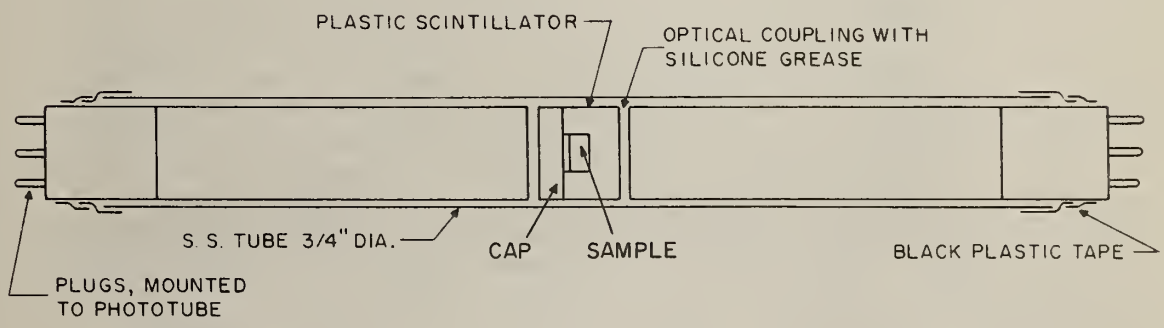

Figure 14. β - scintillator-phototube mounting assembly.

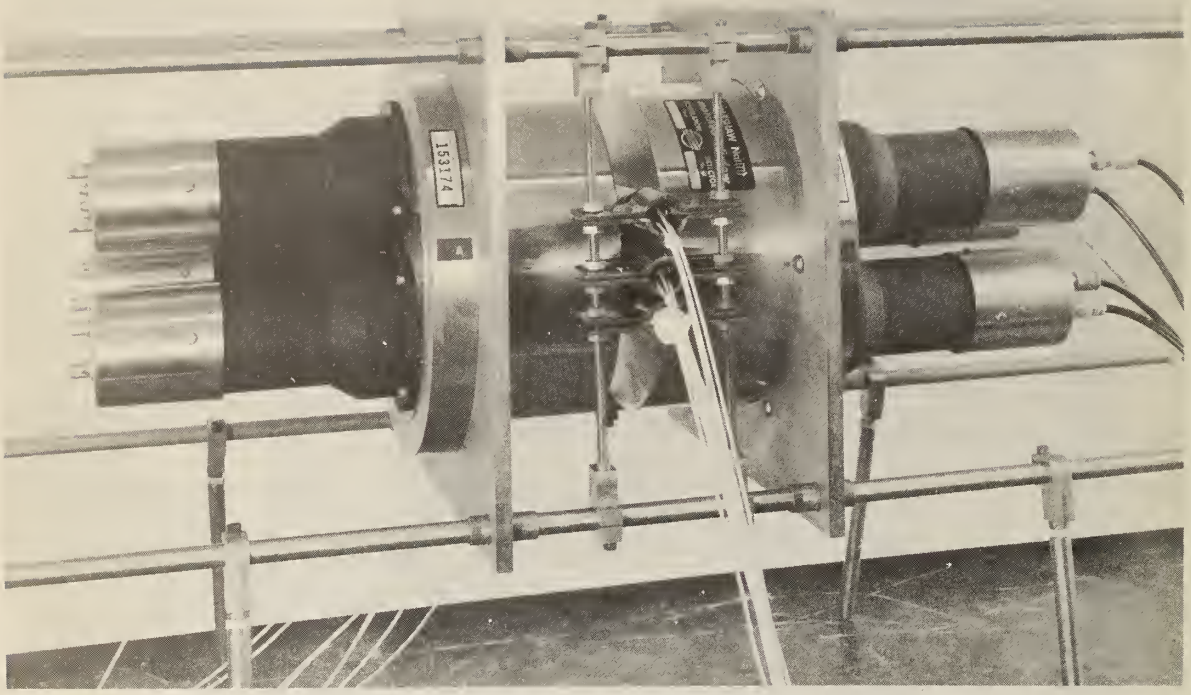

Figure 15. Detector assembly for β-γ-γ coincidence sum spectrometer.

A wiring diagram of the gamma detector system with its high voltage divider is shown in figures 19 and 20. Each detector is comprised of 3 photomultipliers coupled to a single 8 x 4 inch NaI scintillator. Each of the 3 anodes for each detector are joined together and the sum of the anodes from detector A and the sum of the anodes from detector B are connected to a common input of an inverting preamplifier and then to the analyzer for pulse height analysis. (figure 21) It is necessary to match cable capacitances between the three anodes of A and B. This can

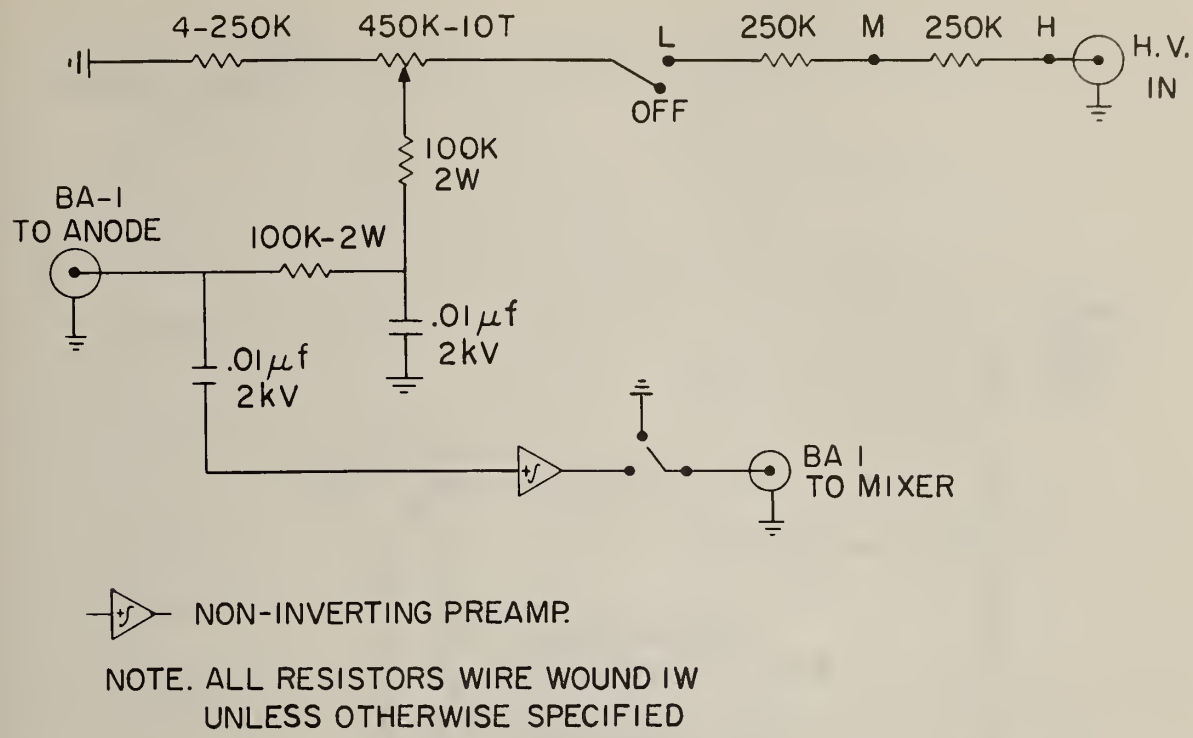

Figure 16. β-detector high voltage wiring system.

be done by first balancing all of the anodes of detectors A and B using a common preamplifier by adjusting the peak position of the 0.66 MeV Cs^{137} to the same channel within ± 0.5 channels, and then adjusting Cs and Cs' (approximately 50-100 pF) to give no change in peak position when the A and B switches are alternately off or on.

In order to derive logic pulses from the gamma detectors a tenth dynode signal is taken from each phototube. The three dynodes, each for detectors A and B are joined at the input to an inverting preamplifier and are then connected to the coincidence logic.

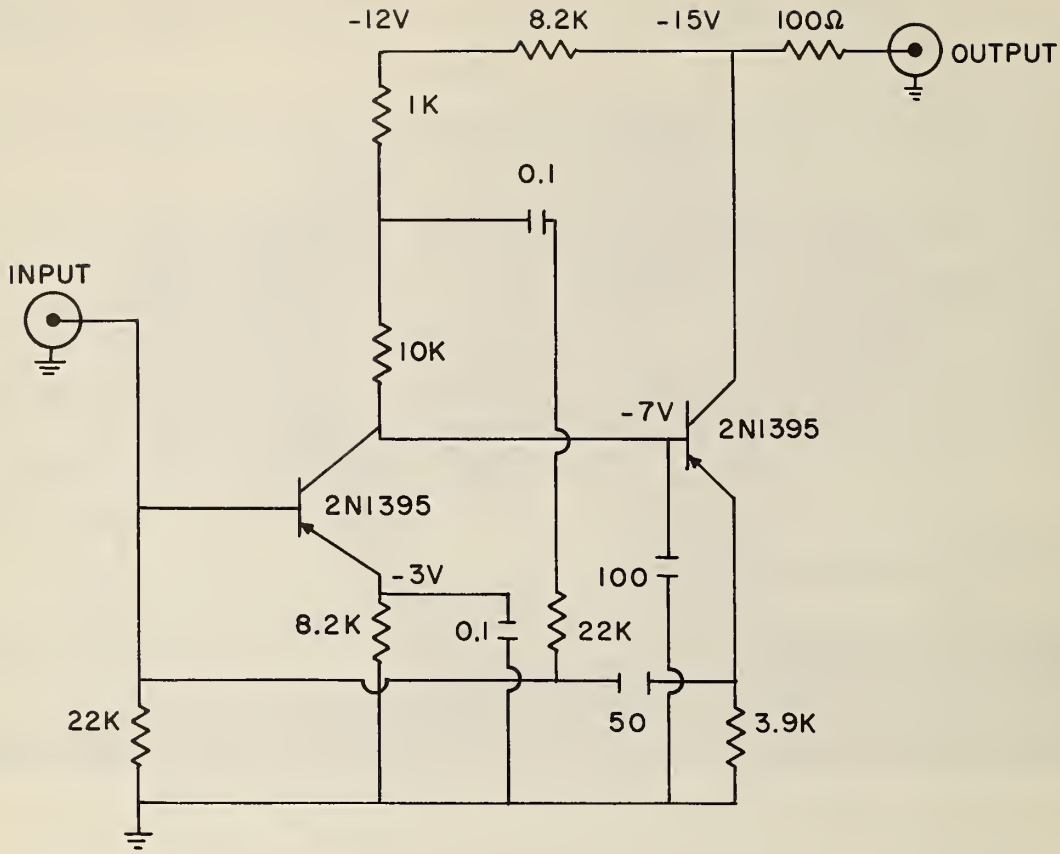

Figure 17. Non-inverting preamplifier.

2. Coincidence logic is performed in two modified 4-channel mixer circuits made by RIDL for use as a 4-detector input device for a pulse height analyzer. Figure 22 shows the representation of the function of the circuits as modified. The numbers adjacent to the inverters, gates, and monostables refer to the transistor numbers in the standard RIDL mixer logic circuit. No modification to the amplifier-discriminators was made. All coincidence logic is conducted with 2 μs pulses produced by the discriminator. The dynode

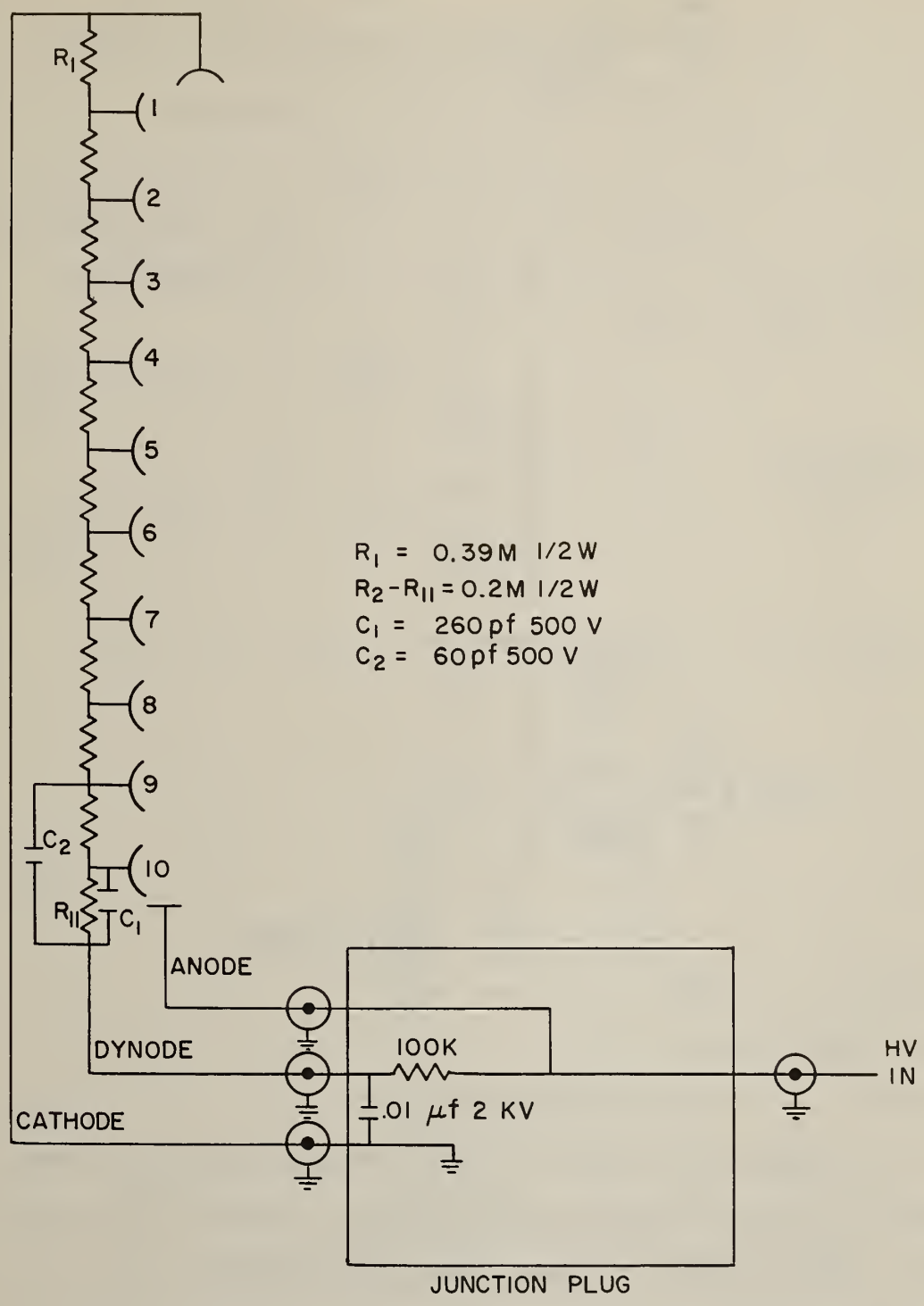

Figure 18. Wiring of β-detector photomultiplier tube.

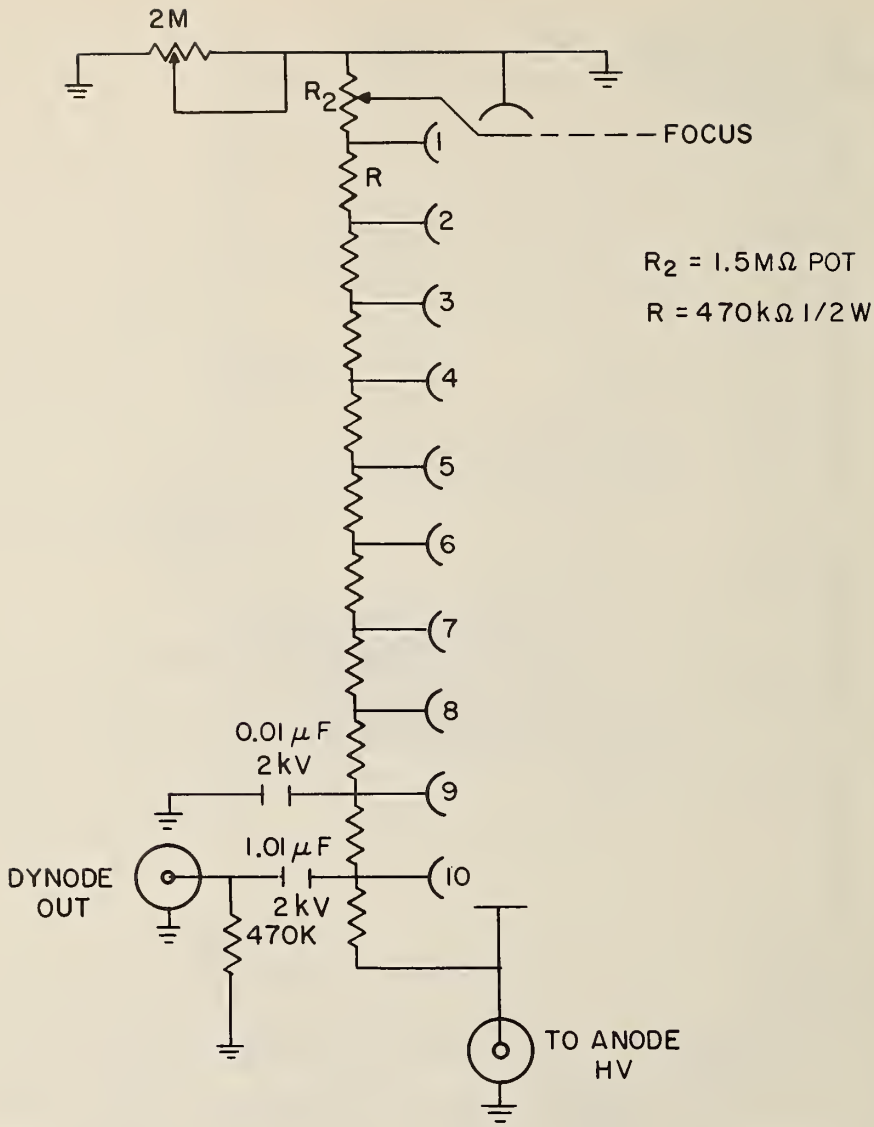

Figure 19. Wiring of gamma detector.

signals from gamma detectors A and B are put into coincidence. The output of this coincidence is put into another coincidence with the output of any of three beta coincidences.

Since each beta scintillator has two phototubes attached to it, the output of each of these tubes is placed in coincidence with the other. This means that random noise pulses

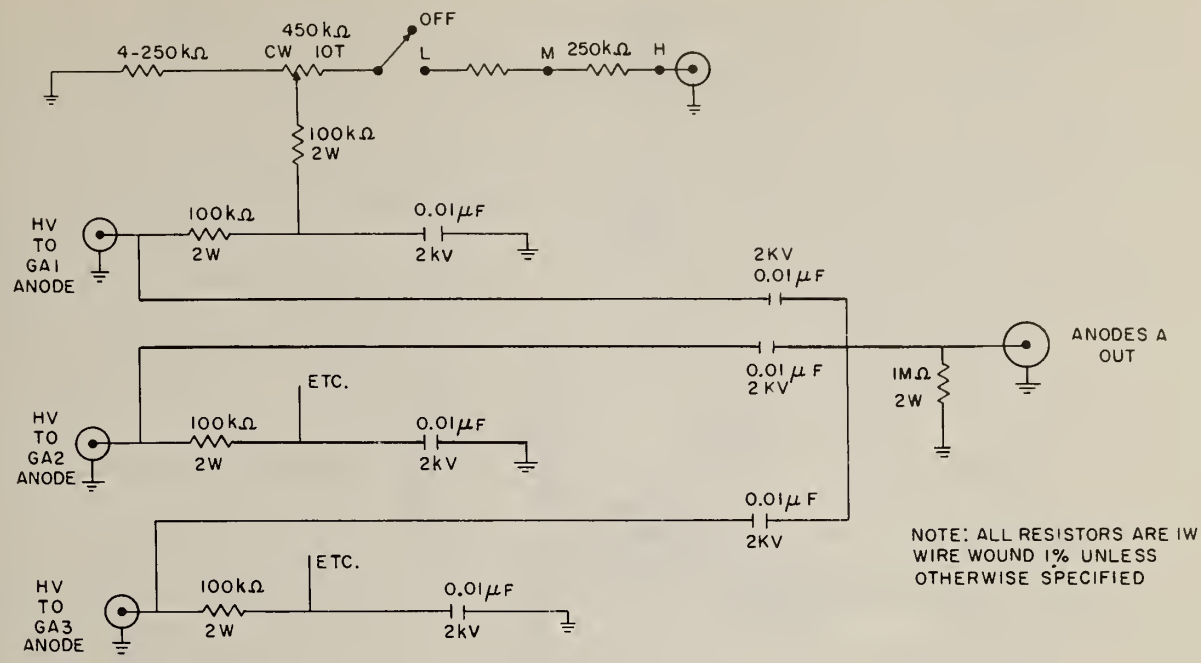

Figure 20. Gamma high voltage anode wiring diagram.

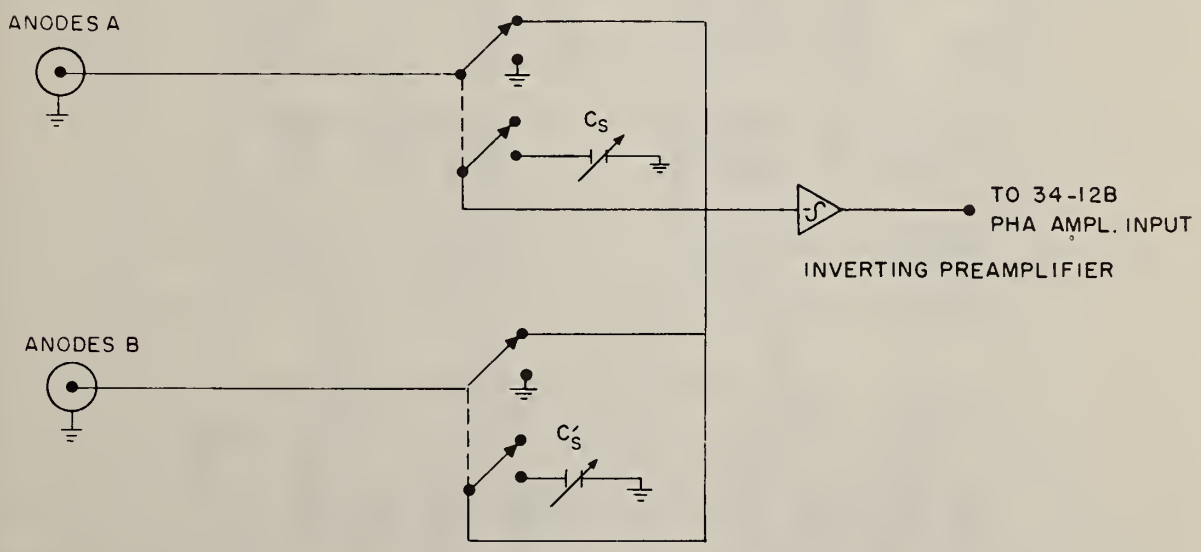

Figure 21. Dual-preamplifier wiring diagram.

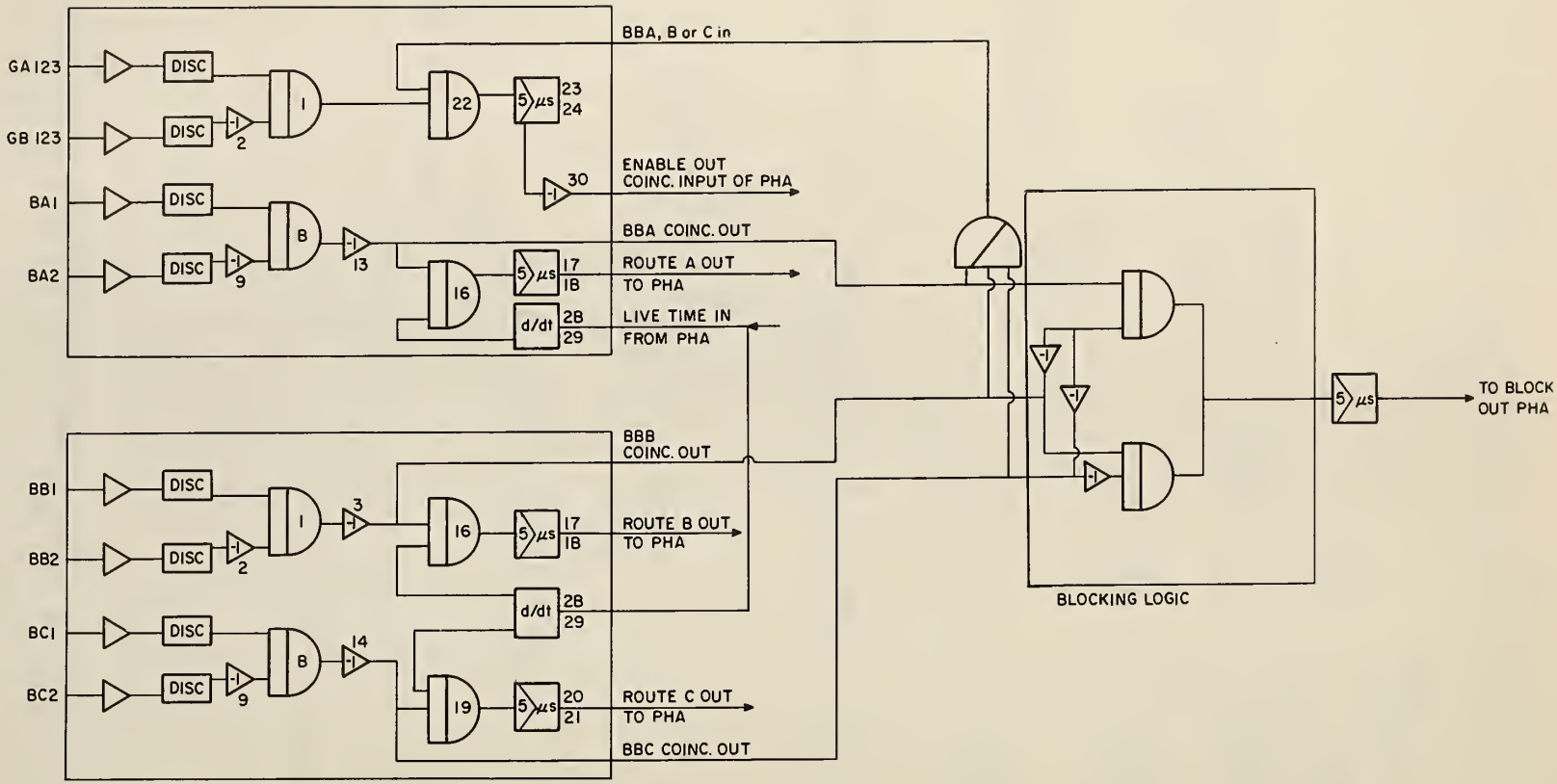

Figure 22. Mixer circuits modified.

in each phototube will be discriminated at the coincidence gate since only events in the scintillator will activate the phototubes at the same time (excluding the random noise coincidences). The beta coincidence output is placed in coincidence with the differentiated leading edge of the live time pulse from the pulse height analyzer to produce a routing pulse. Using this method prevents production of a routing pulse after a pulse is accepted in the analyzer. The output from this coincidence gate provides the routing signal to the analyzer for storage of the gamma anode pulse in the appropriate 100 channel subgroup. The same process occurs for each of the three beta channels. In order to prevent simultaneous routing of pulses from two or three beta channels, a logic system is used to produce a blocking pulse which prevents the pulse height analyzer from accepting a pulse from the anodes of the gamma detectors. This is a three way coincidence gate using two transistors to drive a 5 μs monostable which produces the blocking pulse to the pulse height analyzer (figure 23). Thus, this system allows the simultaneous measurement of three samples without electronic cross talk between the samples.

The output of each beta channel coincidence is put in coincidence with the gamma-gamma coincidence output. This output generates a 5 μs enable pulse which is inverted before entering the pulse height analyzer. The enable pulse is connected to the delay coincidence gate in the analyzer.

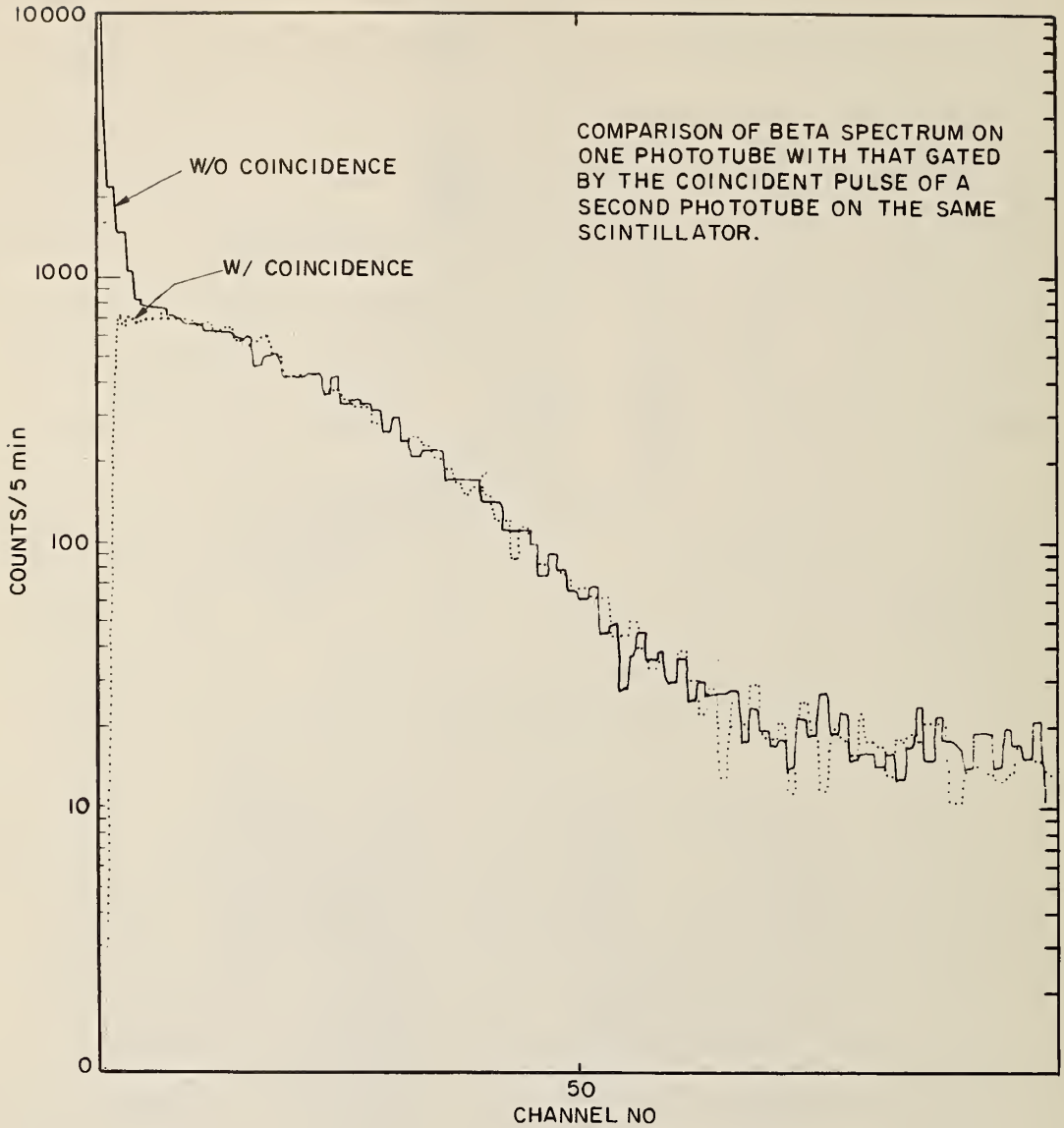

Figure 23. Comparison of beta spectrum on one phototube with that gated by the coincident pulse of a second phototube on the same scintillator.

Although it should operate as well in the prompt coincidence mode, this delay assures that a blocking pulse can close the gate to the analogue to digital converter of the analyzer in plenty of time before the anode pulse arrives.

3. Equipment List

1. Plastic scintillators - Pilot B - Nuclear Enterprises Ltd., Winnepeg, Canada.

2. Phototubes 3/4" diameter, 10 stage, RCA special model. Development type C70136E, six required.

3. Sodium iodide detectors, 8 inch diameter x 4 inches thick, used with three RCA 8054, 3 inch diameter, phototubes on each crystal, Harshaw Chemical Company, two required.

4. High voltage power supply - Model N4035 Hamner Electronics.

5. Four channel mixer, two required, Radiation Instrument Development Company (RIDL) Model 30-17, modified to requirements by K. Miller and J. R. DeVoe (NBS).

6. Block logic circuit. Designed by J. R. DeVoe (NBS).

7. Preamplifier, non-inverting. Designed by R. E. Connally, six required.

8. Preamplifier, inverting. RIDL Model 10-8 two required.

9. Voltage divider, designed by R. E. Connally, one for beta PMT's and one for gamma PMT's.

10. Dual preamplifier, designed by R. E. Connally.

11. Pulse height analyzer, RIDL Model 34-12b.

12. Silicone grease, type C-2-0057 Dow Corning Corporation, used for optical coupling of the plastic scintillators to the photomultiplier tubes.

4. Performance

The system has been checked out using a calibrated source of Co^{60}. Figure 23 shows the beta spectrum of one phototube in comparison with the same spectrum with the analyzer gated by the coincident output of the two phototubes

on the same scintillator. It can be observed that the efficiency for removal of noise pulses in the detectors is high. It has been determined that phototube noise pulses at a rate up to 10,000 pulses sec^{-1} will result in a negligible increase in the coincident background counting rate.

The resolution of each of the two sodium iodide detectors is 8.3% for the 0.662 MeV photopeak of Cs^{137}. A study of gain shift with time indicates that the .662 MeV peak varies within $\pm$ 0.5 channel maximum over a period of 5 days with a calibration of 30 keV channel using 100 channels.

The background between 0.5 and 3 MeV is 16 counts per hour in β-γ-γ coincidence mode. Background of each sodium iodide detector within the same energy range is approximately 350 cpm.

Using the Co^{60} sample mounted in a plastic scintillator measurements were made of counting efficiency. Overall counting efficiency for the 2.50 MeV sum peak is approximately 3.8% using a source with a count rate of 10,000 $d \cdot min^{-1}$. A representative β-γ-γ coincidence spectrum of Co^{60} is illustrated in figure 24.

Several experiments were performed by removing the coincidence requirement from the second beta phototube. Results show that the β-γ-γ coincidence counting efficiency was the same as the coincidence counting efficiency for Co^{60}. However, the background count rate increased by approximately 25%. This means that the overall net detection efficiency is

improved by 25% when using the β-β coincidence to eliminate electronic noise pulses.

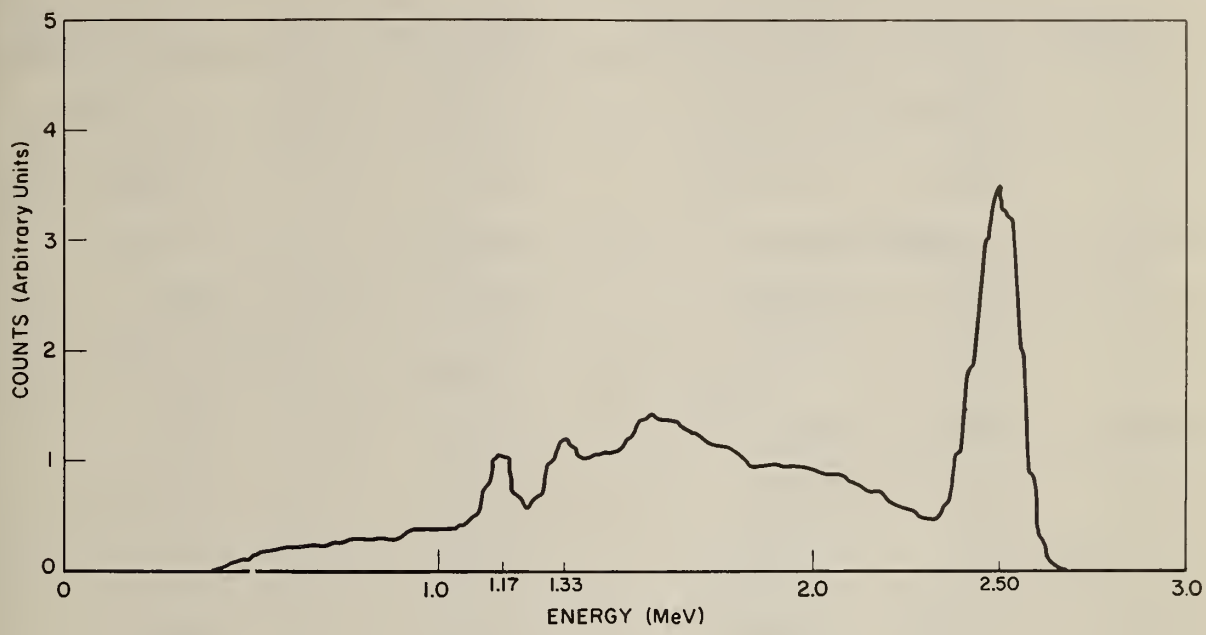

Figure 24. β-γ-γ coincidence sum spectrum of Co^{60}.

For Co^{60} radiation cross talk was observed to occur between samples. Cross talk between samples is 0.1% of the overall radioactivity of the sample in the adjacent mounting position. It is less than .01% for the separated detectors (e.g. 1 and 3).

This spectrometer allows a high degree of discrimination from all radioisotopes not decaying by a beta with two or more coincident gamma rays with the exception of the positron emitter which could be expected to interfere in the energy region of annihilation.

Table 6. Calculated sensitivities for activation analysis using β-γ-γ sum-coincidence gamma-radiation detection.

Isotope	$t_{1/2}$	Sensitivity[a,b] (1.0 c/h)	Isotope	$t_{1/2}$	Sensitivity[a,b] (1.0 c/h)
Na^{24}	15h	0.16pg	Sm^{153}	47h	0.092pg
K^{42}	12h	0.18ng	Gd^{159}	18h	5.5pg
Sc^{46}	84d	0.13pg	Tb^{160}	72d	6.5pg
Co^{60}	5.25y	24pg	Ho^{166}	27h	0.8pg
Ga^{72}	14h	2.2pg	Yb^{175}	101h	2pg
Ge^{77}	11h	37pg	Lu^{177}	6.8d	2.7pg
Br^{82}	36h	0.37pg	Hf^{181}	45d	10pg
Mo^{99}	66h	48pg	Ta^{182}	115d	8pg
Ru^{103}	40d	47pg	W^{187}	24h	0.22pg
Pd^{109}	14h	2.2pg	Re^{186}	89h	20pg
Ag^{110m-}	253d	0.10ng	Re^{188}	17h	1.6pg
Sb^{122}	2.8d	0.92ng	Os^{193}	31h	37pg
Te^{127}	9.4h	46ng	Ir^{192}	74d	0.23pg
Cs^{134}	2y	2ng	Pt^{197}	18h	27pg
La^{140}	40h	0.92pg	Au^{198}	2.7d	3.3pg
Ce^{143}	33h	12pg			

[a]Calculated from data contained in: Senftle, F. E., Champion, W. R., Suppl. Nuovo Cimento 12, 549,71 (1951), Table of Isotopes and Hollander, J. M., Perlman, I., and Seaborg, G. T., Rev. Mod. Phys. 25, 469 (1953) and Way, K., et. al., "Nuclear Data Sheets", U. S. Government Printing Office, Washington 25, D.C., 1963.

[b]Parameters used in calculation:

1. Flux, 10^{13} $n \cdot cm^{-2}$ sec^{-1}

2. Significant ocunt rate at energy of interest, 1.0 count ch.

3. Time of irradiation, 15 h or saturation, whichever is less.

An additional advantage of this type of spectrometer is the low background associated with it. Using a count rate of twice the background as a lower limit of detection, a table of theoretical sensitivities (table 6) for activation analysis of nuclides which decay by β-γ-γ coincidence was prepared.

We wish to express our appreciation to Mr. R. W. Shideler for supplying the plug-in preamplifiers and Mr. H. Kocol for performing the calculations for table 6.

(W. P. Reed and J. R. DeVoe)

H. Abstracts of Papers and Publications

The following are abstracts of manuscripts that were presented at Texas A & M in April 1965.

1. Copper and Zinc in Lung Tissue

Keenan, R. G., Marcus, J. H., and DeVoe, J. R., "Simultaneous Determination of Copper and Zinc in Human Lung Tissue by Neutron Activation Analysis", Proceedings of International Conference, "Modern Trends in Activation Analysis" Symposium, College Station, Texas, April 1965, to be published.

"Certain trace elements, including copper and zinc, are constituents of numerous enzymes and function as essential catalysts in biosyntheses. The expanded interest in these substances has supplied a demand for micro-analytical techniques of increased sensitivity, accuracy, and precision if meaningful conclusions are to be derived from the analytical data. This paper shows that good precision may be realized in the activation analysis of complex biological specimens with only a few, one-step chemical separations.

"The nuclear reactions $Cu^{63}(n,\gamma)Cu^{64}(12.8h)$ and $Zn^{68}(n,\gamma)Zn^{69m}(13.8h)$ were used for the analysis. The samples are irradiated in a thermal neutron flux of 10^{13} $n \cdot cm^{-2}$ sec^{-1}. The copper is extracted as the acetylacetonate into chloroform from an acetate system buffered at a pH of 4.75. The remaining aqueous phase is extracted with chloro-

form to remove most of the acetylacetone dissolved in the aqueous phase. The zinc is extracted as the dithizonate into chloroform, and is back-extracted into 1% HCl for counting. Careful internal standardization was used for correction of results for variation in chemical yields.

"Application of the method to the simultaneous determination of copper and zinc in lung samples provided values of the same order of magnitude as those reported by Tipton and Cook for U.S. adults using emission spectrographic procedures which were between 7 and 10 ppm for copper and 40 and 70 ppm for zinc. Comparison of the precision of this method with that of emission spectroscopy indicates that this activation technique has at least three times better precision."

2. NBS Facilities and Program

DeVoe, J. R., and Smith, G. W., "Activation Analysis Program and Facilities at the National Bureau of Standards", Proceedings of International Conference, "Modern Trends in Activation Analysis" Symposium, College Station, Texas, April 1965, to be published.

"The National Bureau of Standards' Radiochemical Analysis Section is now developing a capability in activation analysis to complement other analytical techniques using radioisotopes in analysis.

"Activation analysis can be likened to spectrometric methods in which the re-emitted radiation from excited

states (e.g. radioisotopes) which are often long (e.g. milliseconds to years) are measured and related to the kind and amount of element which interacted with the primary radiation. The analyst learns to discriminate from unwanted excitation processes by varying the type and energy of incident radiation, the length of time of the excitation, and the type of detector that measures the re-emitted or secondary radiation.

"To be most effective for our applications of activation analysis a computer is best used in a regenerative feedback loop which consists of selecting, in sequence, the proper nuclear reaction, time of irradiation, complexity of radiochemical separation, appropriate detector, stripping of time dependent radiation spectra, and judgment of the analyst. It should be emphasized that a selective combination of the above variables does not place too large a burden on any one of the variables.

"Plans for the development of facilities to carry out these concepts are discussed. Facilities which are planned or under construction are: a 10 MWh nuclear reactor, a 40 kW-100 MeV Linac linear electron accelerator, a wide variety of pneumatic tube facilities, hot laboratories, a clean room complex, and low background counting facility."

3. <u>Tellurium in Cartridge Brass</u>

"Becker, D. A., and Smith, G. W., "Activation Analysis Determination of Tellurium in Standard Reference

Cartridge Brass and White Cast Iron", Proceedings of International Conference, "Modern Trends in Activation Analysis", College Station, Texas, April 1965, to be published.

"For the first time, neutron activation was used for elemental analysis of NBS Standard Reference Materials at the National Bureau of Standards. The materials were cartridge brasses and white cast irons, analyzed for tellurium content utilizing the nuclear reaction:

$$Te^{130}(n,\gamma)Te^{131} \xrightarrow[25m]{\beta-} I^{131}$$

The samples were irradiated and the I^{131} separated by a destructive distillation and solvent extraction technique. Chemical yields were obtained by means of I^{125} tracer. Tellurium concentrations of 2 to 800 ppm were determined, and the results compared with those obtained on identical samples by polarography and emission spectroscopy."

4. RADIATION TECHNIQUES

The major effort of this group in the past year was the design of Mössbauer spectrometers which have a very high precision and accuracy. The electromechanical Mössbauer drive described last year has been updated to some extent and a complete mechanical design of the transducer mechanism is reported here. Engineering prints of this system may be obtained by writing to this section (310.01).

The optical Mössbauer drive reported at the American Physical Society in April 1964 has been improved by the design of a sensitive frequency comparator which is described in both this and the instrumentation part of this report.

Both of these machines will be used in calibration of the first Standard Reference Material (SRM) for Mössbauer spectroscopy. A description of this standard and preliminary spectra of it are included within this report. This SRM will be available in about three months, and all orders which have been received to date will be filled by that time.

In addition to this effort the group has been able to clarify the structure of iron in a variety of EDTA complexes, to indicate detectability of about 1% of iron carbides such as austenite in an iron matrix, and to determine the species of iron on certain organic resin cation exchangers.

A number of experiments have been made in an effort to make Mössbauer sources with narrow line widths and large fractions of recoiless emission. These efforts have been

rewarded through the production of a Sn^{119m} source that will increase, to a considerable extent, the effectiveness of Mössbauer spectroscopy in studying the structure of tin compounds.

The group's leader, Dr. J. J. Spijkerman was one of four representatives from the United States who took part in a panel discussion in April on the "Application of Mössbauer Effect" sponsored by the International Atomic Energy Agency in Vienna, Austria. This panel discussion brought into focus the fact that Mössbauer spectroscopy is a very promising tool for quantitative and structural analysis.

A. Standard Reference Material for the Differential Chemical Shift of Iron Compounds in Mössbauer Spectroscopy

Mössbauer spectroscopy shows great promise in the elucidation of chemical structure. In fact it may be stated that this technique will take its place along with other spectroscopies such as nuclear magnetic resonance and electron spin resonance by providing supplementary information that assists in identifying chemical structure.

The technique has been described in detail by many authors [9,10,11,12]. For the purposes of this presentation it is instructive to describe the technique with regard to its use for measuring chemical effects. A Fe^{57} Mössbauer source is prepared by placing Co^{57} into the lattice of a crystalline material in such a way that a significant number (theoretical approximately 70%) of the 14.4 keV gamma rays

are emitted from the source with a negligible fraction of energy removed from it through recoil of the nucleus. This will produce a 14.4 keV gamma ray with a theoretical line width (FWHM) of 4.7×10^{-9} eV. This line width is so narrow that it is possible to observe very small changes in the difference of the energy levels between the 14.4 keV excited state and the ground state of Fe^{57}. For example, the change in the energy levels caused by the interaction of the extra-nuclear electron configuration with the nucleus can be measured. This effect can manifest itself through a hyper-fine coupling with the nucleus producing a monopole, dipole, and quadrupole interaction. When no field gradient is present at the nucleus (e.g. high symmetry in the electron distribution) a displacement in the energy level of the 14.4 keV excited and ground states of the nucleus can result from direct interactions between the penetrating electrons and the nucleus through I J coupling (I total nuclear angular momentum, J total electron angular momentum). This monopole interaction is called the chemical shift. The quadrupole interaction results from a net electric field gradient at the nucleus which removes the degeneracy of the spin states of the energy levels in the nucleus by producing a nuclear electric quadrupole splitting (for $I \geq 1$). Internal magnetic fields or an externally applied magnetic field further removes the degeneracy and results in a nuclear Zeeman effect (6 lines in the case of the 3/2 to 1/2 transition in Fe^{59}).

Let us omit from consideration any electric quadrupole or magnetic interaction and discuss the spectroscopy used to measure the chemical shift. The source is emanating a 14.4 keV gamma ray of the very narrow line width that is produced as a result of the transition from the chemically shifted 14.4 keV state to the chemically shifted ground state. An iron bearing chemical compound is placed in the gamma-ray beam and most often a detector is placed so as to measure the transmitted gamma rays. If the chemical environment of the absorber is different than the source, no Mössbauer absorption occurs because the energy levels of Fe^{59} in the absorber are displaced from that of the source. However, the Mössbauer spectrometer produces a Doppler motion along the gamma-ray vector of perpendicular incidence to the absorber which adds or subtracts energy from the gamma ray depending upon the direction of the motion velocity vector. By plotting the transmitted gamma-ray intensity as a function of the relative Doppler velocity a Mössbauer spectrum is obtained. We measure a chemical shift, δ, which can be indicated as $\delta = \Delta E_a - \Delta E_s$ where ΔE_a is the difference between the 14.4 keV state and ground state of the Fe^{57} nucleus in the absorber, and ΔE_s is the difference between the same levels in the source.

The Mössbauer spectrum measures a relative chemical shift. Therefore, one can compare the chemical shift of a series of iron chemical compound used as absorbers with

respect to a single source. Such measurements have been made for a number of compounds. A serious difficulty arises, however, when one spectroscopist wishes to compare data on the chemical shift of his compound with that of another spectroscopist. The spectroscopists must find a compound which can be measured in both laboratories so that a normalization factor may be calculated. The accuracy of the normalization factor is affected by the linearity of the spectrometer, of course; but it also is affected by the degree of chemical identity, either between the sources or between the absorbers in each laboratory. It is believed that some of the serious discrepancies that appear in the literature are the result of the use of improper normalization factors due to the nonuniformity in chemical environment in supposed identical sources or absorbers prepared by each laboratory.

Very recent work in our laboratory indicates that the method of preparation of an iron absorber can seriously affect the shape of the six lined spectrum obtained. This has been found to be due to presence of iron carbides whose phase transitions are very dependent on the type of heat treatment that is used [13].

During the Gordon Research Conference in Inorganic Chemistry, August 1964, the opinion of the majority of the attendees at the Mössbauer symposium was that the National Bureau of Standards should develop an absorber which can be used as a standard reference for chemical shift measurements.

The requirements of such a standard are as follows:

1) The standard must be stable with time, and should not deteriorate under standard laboratory conditions.

2) The compound must be well defined chemically and physically.

3) The line width of the Mössbauer spectrum must be nearly theoretical, with a large recoil-free fraction at room temperature.

4) The chemical shift should fall in the same region as most other iron compounds and should have a low temperature coefficient.

5) A doublet spectrum would be highly desirable to minimize the dependence on line shape and to provide, simultaneously, a velocity calibration.

Several materials were considered (e.g. iron metal), but as indicated above it was found that it was difficult to produce the degree of chemical uniformity that was required.

At this conference it was agreed to investigate the properties of disodium pentacyanonitrosoferrate dihydrate $Na_2[Fe(CN)_5NO]\cdot 2H_2O$ (sodium nitroprusside). It has been found that this material has all of the requirements for a satisfactory Standard Reference Material for Mössbauer spectroscopy. Pertinent data on the chemical, physical, and crystal properties appear in table 7.

To assure that the chemical system be as highly reproducible as possible, single crystals were grown from the reagent grade salt. Platelets 1 x 1 x 0.0775 cm were cut and polished so that the molecular axis of symmetry is along the plane of the platelet, (see figure 25). When the crystal

Table 7. Chemical, physical and crystal properties of $Na_2[Fe(CN)_5NO]\cdot 2H_2O$.

Molecular weight	297.95
Specific gravity	1.72 g/cm^3
Color	Red
Solubility in H_2O	40 g/100 cm^3 at 16 °C

Crystallographic data [15]

Orthorhombic, space group D_{2h}^{12} - Pnnm

Cell constants

$a = 6.17 \pm 0.03$ Å

$b = 11.84 \pm 0.06$ Å

$c = 15.43 \pm 0.08$ Å

Habit [110] Primary Rhombic Prism

[010] Brachy-pinakoid

[011] Primary Brachy-domal Prism

Crystallizes in needles along the b-axis

---

is mounted so that the Mössbauer radiation passes through perpendicular ($\pm$ 2°) to the bc plane of the platelet, the absorption spectrum shown in figure 26 is obtained. Preliminary measurements give two peaks separated by $\Delta E_Q = 0.1712 \pm .0004$ cm/s, which result from the electric quadrupole splitting of the excited state of the iron nucleus. The point half way between these two peaks is assigned a differential chemical shift value (δ_o) of zero. The procedure will be to place the standard reference absorber in the spectrometer

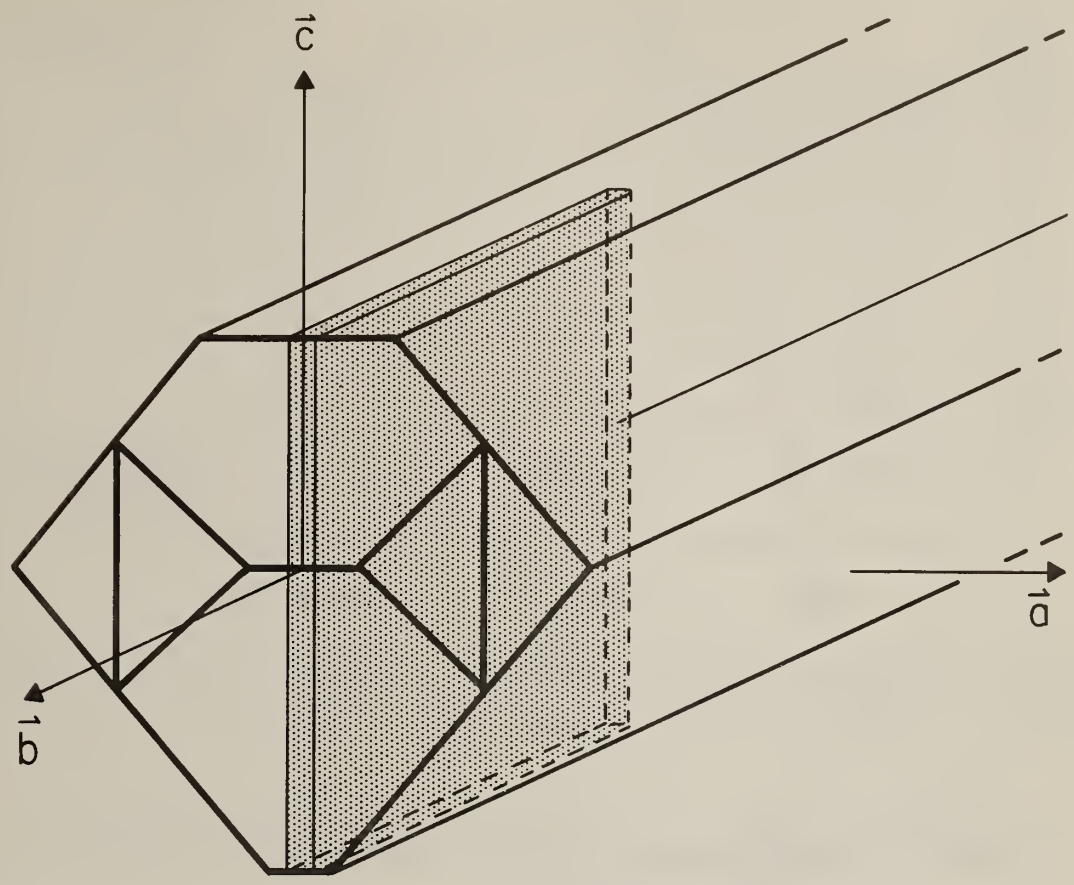

Figure 25. Single crystal of sodium nitroprusside, showing habit and orientation of platelet.

and to calibrate the spectrometer in accordance with the point of zero differential chemical shift. The chemical system to be measured is then placed in the spectrometer and the differential chemical shift is measured directly.

These single platelets will soon be available for purchase from the NBS Office of Standard Reference Materials (Division 302). A Mössbauer spectrum using a Co^{57} palladium source with the narrowest line width obtainable will be

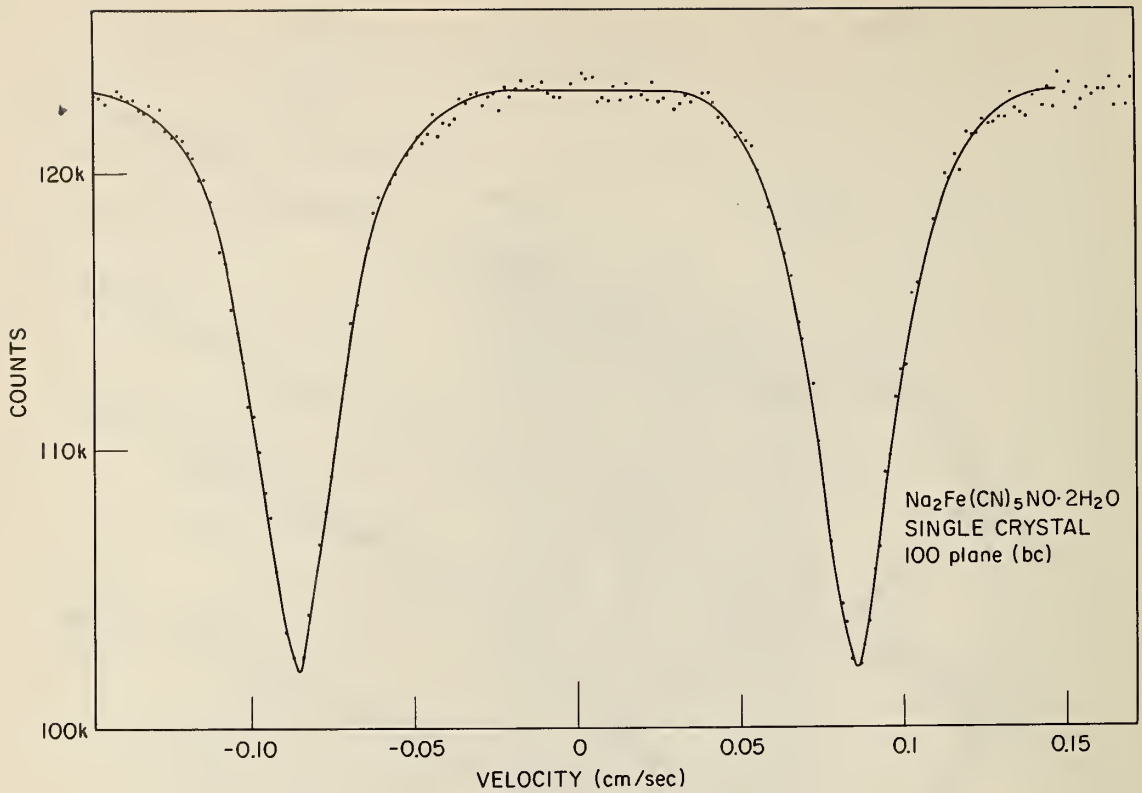

Figure 26. Mössbauer spectrum of Standard Reference Material for Fe.

furnished with each platelet so that the spectroscopist will be able to calibrate his spectrometer to that of NBS in addition to using the absorber as the reference for measuring differential chemical shift; such a spectrum is shown in figure 26. This spectrum will be calibrated with a Mössbauer spectrometer which uses a Doppler motion drive incorporating on optical interferometric technique (see part B). This spectrometer has, theoretically, an accuracy and a precision of 1 part in 100,000 (relative standard deviation of a single determination).

(J. J. Spijkerman and J. R. DeVoe)

B. Standard Reference Material for Iron in Mössbauer Spectroscopy

While major emphasis has been placed on the use of the sodium nitroprusside as a standard for measuring chemical shift it is important to consider its use in other areas of Mössbauer spectroscopy.

The Mössbauer drive using optical interferometry should provide a very accurate means of measuring the distance (in units of velocity) between the peaks due to the quadrupole splitting in the single crystal. This can then be used to calibrate the spectrometer in this velocity range for use in any experiments in physics or chemistry. As indicated in the above section, a precision and accuracy of one part in 100,000 is theoretically obtainable with the optical spectrometer. However, careful measurements will be made to determine whether small errors in crystal orientation materially affect the precision of measurement of this splitting. It is very likely that this Standard Reference Material will be a factor of 10 more precise than those data which have been most often used as a reference [14].

(J. J. Spijkerman and J. R. DeVoe)

C. Differential Chemical Shift of Iron Compounds

The use of the sodium nitroprusside single crystal absorber should result in an improvement in the quality of data for chemical shifts for the reasons indicated in section A above. In order to make a clear distinction in

such reporting of data, it is suggested that the term differential chemical shift (δ_n) be used when a chemical compound is measured with respect to the Standard Reference Material. The National Bureau of Standards plans to act as a clearinghouse for data on differential chemical shifts. These data will be published annually as a part of the Radiochemical Analysis Sections' Progress Report as well as being incorporated into an information retrieval system using a digital computer. Details on this will be published at a later date.

It is hoped that this effort will bring stability and integrity to the promising new tool of Mössbauer spectroscopy for structural analysis of chemical compounds.

(J. J. Spijkerman and J. R. DeVoe)

D. Absolute Velocity Mössbauer Spectrometer Using Optical Fringe Counting Technique

Mössbauer spectroscopy involves the measurement of the relative nuclear energy levels between a Mössbauer gamma-ray source and an absorber by Doppler shifting the gamma radiation so as to produce resonant absorption.

The Doppler velocity can be produced by mechanical or electromechanical [15] means, and either constant velocity, or constant acceleration is employed to obtain a Mössbauer spectrum.

Mechanical means of producing a Doppler motion have inherent long term stability, are reproducible from one cycle to the next, and the average velocity can be measured with

great accuracy; but, due to friction and vibrations, the instantaneous velocity is not constant. Also, the slow response of mechanical systems makes it difficult to incorporate feedback.

Electromechanical transducers, using velocity feedback, are used with good success in Mössbauer spectroscopy, either to generate a constant velocity motion, or constant acceleration. The instantaneous velocity can be obtained from a measurement of the emf of a velocity sensing coil [18]; but it requires calibration, either by a direct method, or from a known Mössbauer spectrum. A direct method for measuring velocity, with high accuracy, using an optical interferometer will be described.

1. Optical Interferometer

The use of a Michelson interferometer for the measurement of length is well known [16,17] and with minor modification it can be used to measure velocity.

The interferometer consists of a stationary light source, beam splitter, reflector, and a movable second reflector, as shown in figure 27. The light intensity produced by the interferometer varies sinusoidally with the optical path difference (ΔS) between the two reflectors. The current produced by a photomultiplier is then

$$I(\Delta S) = I_D + I_o \cos \frac{4\pi \Delta S}{\lambda} ,$$

where I_D is the dark current, I_o the signal current. If the

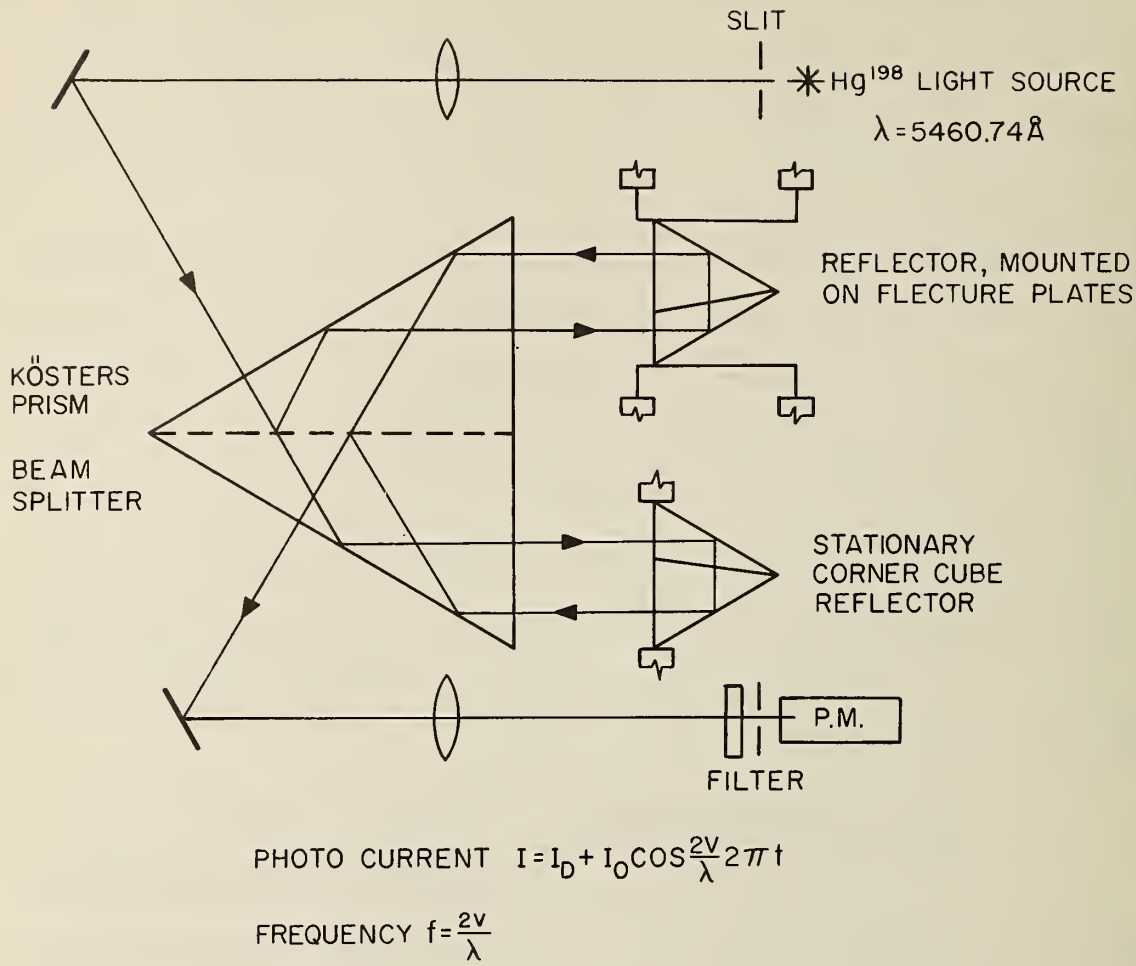

Figure 27. Optical system for measuring absolute velocity.

second reflector is not stationary, but moving with a velocity v, the photomultiplier current will be time dependent,

$$I(t) = I_D + I_o \cos 2\pi \frac{2v}{\lambda} t,$$

with a frequency $f = 2v/\lambda$. For a velocity of 1 mm/sec, using the Hg^{198} green line of 5460.74 Å, this frequency corresponds to 3662.5 hertz. The interferometer reduces the measurement of velocity to a frequency measurement, and

counting techniques can be used.

The conventional Michelson type interferometer would be somewhat inconvenient to use with a Mössbauer spectrometer because of alinement requirements. These requirements can be considerably reduced by using corner cube reflectors [18] instead of plane mirrors and a Kösters prism [19] for a beam splitter, as shown in figure 28. This arrangement produces circular fringes, and the center fringe is focused upon the photomultiplier cathode.

2. Electronic Instrumentation

The Doppler motion is generated by a loudspeaker with a double voice coil, the second coil acts as a velocity pickup coil and is incorporated in a feedback loop, as shown in figure 29. The travel of the loudspeaker coil is limited by a photocell slit system, which generates the square wave voltage required for constant velocity. The reflector and the loudspeaker coil are suspended by two flexure plates, which are photo-etched from 0.005-inch beryllium copper, and provide up to one inch travel.

The fringe count frequency measures the change in distance with high accuracy. To provide high precision and accuracy in the velocity produced by the drive, the fringe count frequency is compared with a known frequency derived from the NBS Standard Frequency (WWV) to produce the required velocity. This comparator is shown schematically in figure 4, and is described in part 2 of this report. This comparator

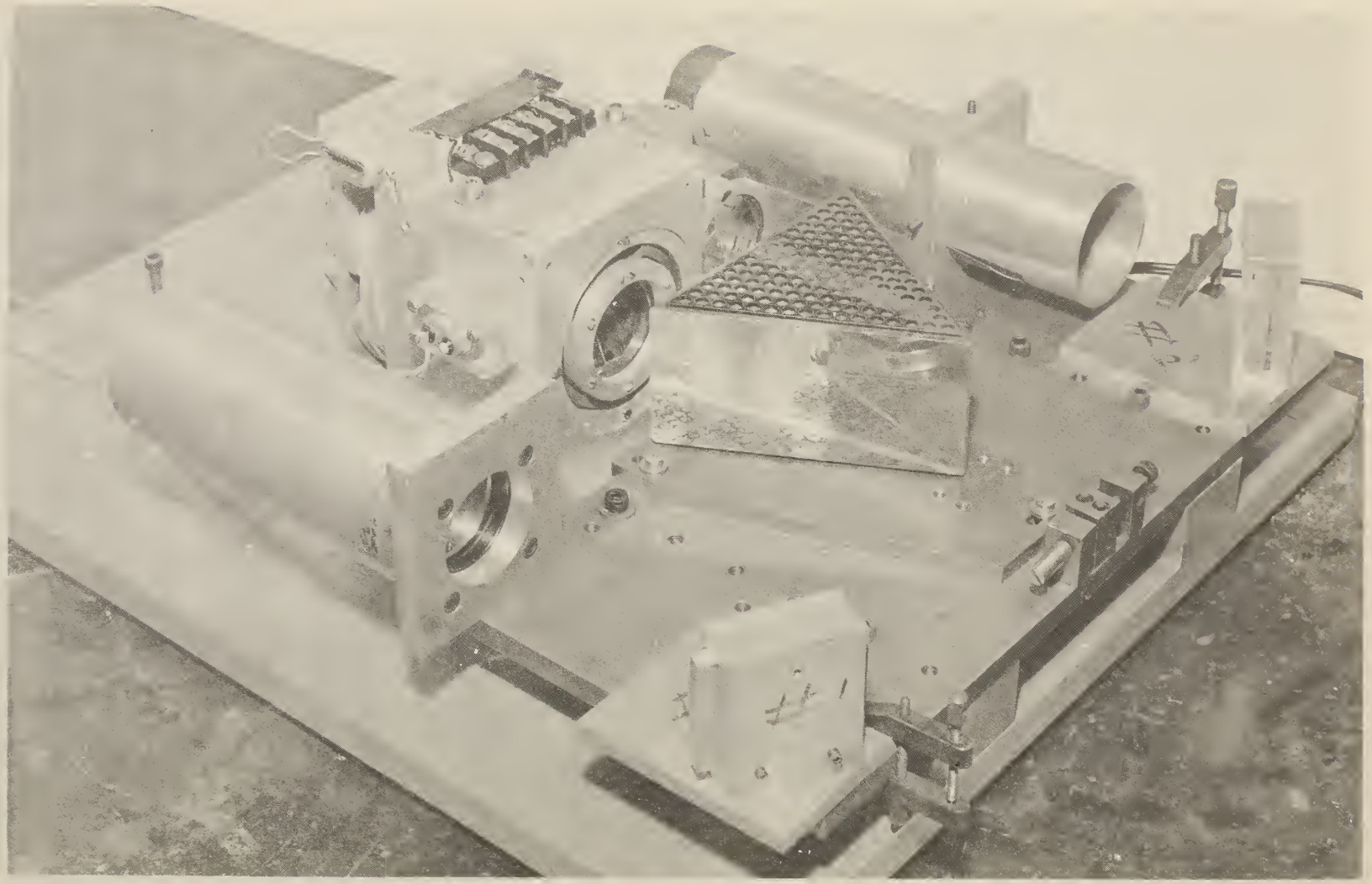

Figure 28. General layout of Doppler drive using optical interferometry.

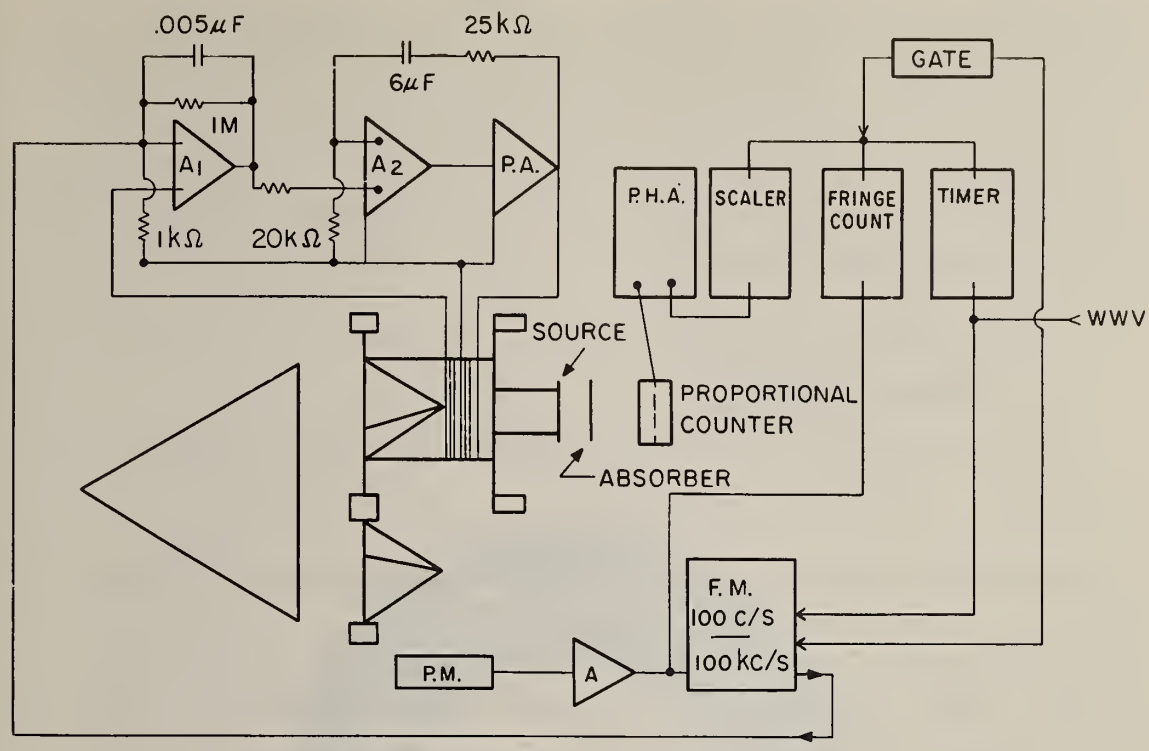

Figure 29. Mössbauer drive and velocity measuring system.

is a scaling device which has four stable states, -1, -0, +0, and +1, depending upon whether the velocity is too low, correct, or too high, respectively. An analog output of this scaler provides the correction signal for the drive. Accuracy and precision of this Doppler motion producing transducer is theoretically 1 part in 100,000.

(J. J. Spijkerman)

E. Design of a Drift-Free Mössbauer Spectrometer

1. Introduction

An electro-mechanical Mössbauer spectrometer is composed of two parts: (1) the driving electronics and (2) a mechanical

transducer slave which produces a velocity function from the voltage function output of the electronics. The electronics of the N. B. S. spectrometer have been described elsewhere (see abstract). In this report the latest mechanical design, changes in the electronics, and an additional electronic circuit will be described.

2. Component Design

In the design of the spectrometer several criteria were considered. The moving parts of the spectrometer should not be hampered by friction. The supporting mechanism for the moving parts should constrain them to move in a reproducible straight line. The supporting device should have a long life, and it should be able to handle motion with amplitudes of up to 3/4 inch.

a. The Flexure Plates. The moving parts of the spectrometer are supported by a pair of 5 mil beryllium copper flexure plates (figure 30). The flexure plates have the ability to support the weight of the moving parts, and yet they do not appreciably hinder the motion. Because of their design, they have little tendency to deform under the stresses caused by the weight of the moving parts. They do not deform even over long periods of time; therefore, the spectrometer is virtually free from the misalinement which causes friction to develop.

The flexure plates are photo-etched in a process quite similar to that used in the production of printed circuits.

First an enlarged drawing and a pair of negatives are made to scale from the drawing by photo-reduction. The negatives are then used to expose both sides of a piece of light sensitized beryllium-copper. The coating on the beryllium-copper is then developed and a flexure plate is etched. This process makes the flexure plates very reproducibly and, therefore, interchangable with each other.

Figure 30. Flexure plate.

As a consequence of the design of the flexure plates, a translation of the moving parts of the spectrometer will cause a small rotational torque between the inner and outer diameters of each flexure plate. It is necessary that the two have identical space orientations, i.e. the contact points must be at the same angle on both ends, or an unequal

rotational torque will develop between them causing one of the plates to buckle and to interfere with the desired motion. Much of the design effort on the spectrometer was made to insure that the flexure plates had the proper space orientation.

b. The main frame of the spectrometer. The main frame of the spectrometer (diagram in figure 31 and photograph in figure 32) consists of (1) a speaker magnet, (2) two flexure plates, (3) a linear velocity transducer coil, (4) two push rods, (5) the lamp and photocell housing, (6) a linear velocity transducer core (LV Syn Core), (7) a speaker coil, (8) the slit system, (9) an alinement tube, (10) two end plates, and (11) the transducer housing.

The two end plates and the alinement tube are bolted together and their alinement is insured by careful machining, and by the use of two dowel pins at each end of the tube. The speaker magnet and flexure plates are clamped to the end plates and alined by dowel pins. Thus the alinement of the spectrometer is assured with the exception of the transducer core in the transducer coil.

A flexure plate is clamped into a socket on each end plate. The inner diameter of the front flexure plate is clamped to a push rod and the speaker coil. The push rod passes through the hole in the speaker magnet and connects to the L.V. Syn Core, which in turn connects to the other push rod which is clamped to the inner diameter of the rear

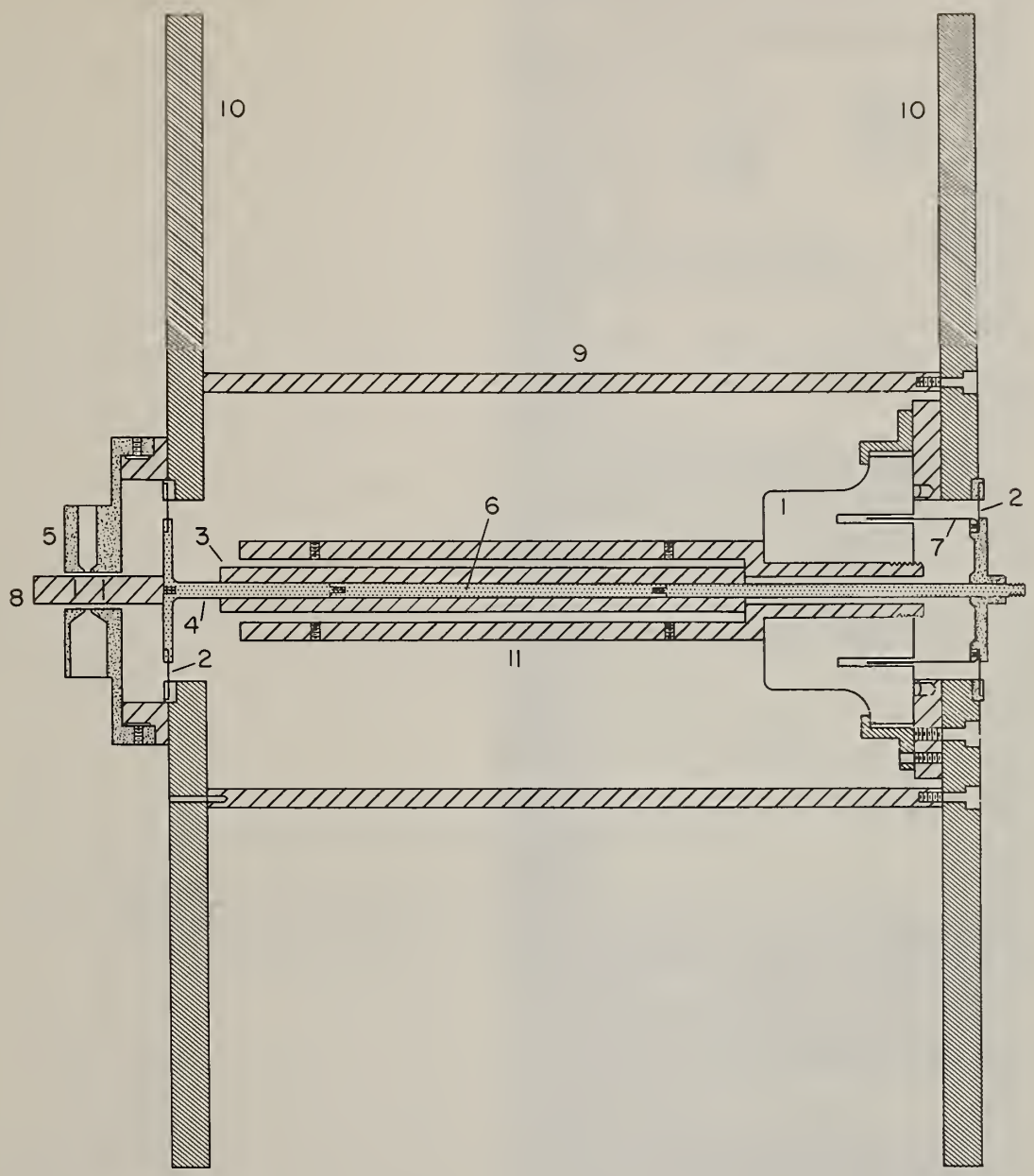

Figure 31. Mechanical design of the Mössbauer spectrometer.

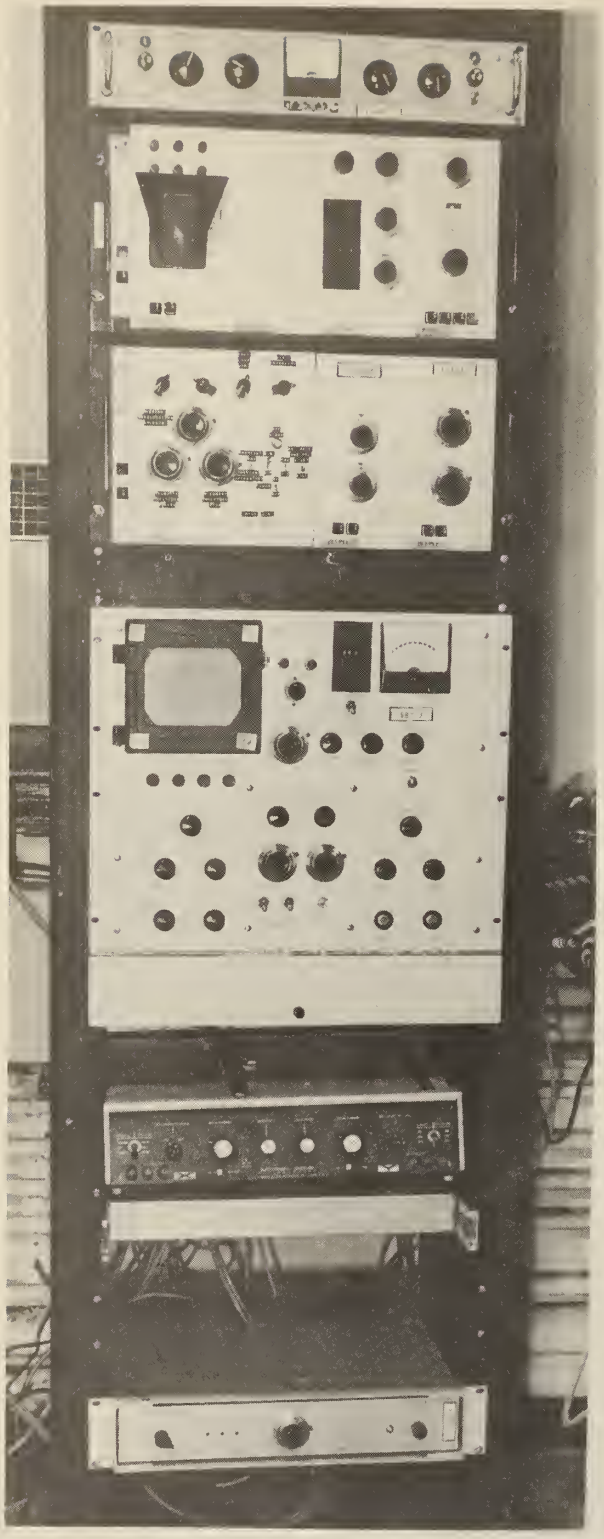

Figure 32. Electronics for NBS Mössbauer spectrometer.

flexure plate. The slit system is attached to the rear push rod and extends behind the rear end plate. The photocell and lamp housing mount onto a ring which is bolted onto the outside of the rear end plate. It can be rotated on the ring so that the slits, lamp, and photocell line up.

The spectrometer is supported by the front and rear end plates. These plates have been made oversized, and they have many drilled and tapped holes in them to facilitate mounting equipment used in experimental work.

c. The alinement procedure. Except for the L.V. Syn Core inside of the L.V. Syn Coil the spectrometer is alined during the assembly. To aline this remaining part of the spectrometer, the following procedure is used:

The mechanical feedback loop is opened by replacing the L.V. Syn Coil in the circuit by a 20 kΩ resistor. A small amplitude, one sine wave, is introduced at the input of the electronics. The output of the monitor L.V. Syn Coil is observed on an oscilloscope, and if the sine wave has flat perturbations around the zero voltage crossover (stick slip operation) the spectrometer needs to be alined. By using the eight set screws in the transducer housing to adjust the L.V. Syn Coil position, and by observing the monitor coil output, the spectrometer can easily be alined so that there will be virtually no rubbing.

d. Changes in the electronics. In the past year

there have been several changes in the electronics in the N. B. S. Mössbauer Drive. The power amplifier has been modified to utilize newer and better transistors. The feedback loop has been modified and a new logic circuit has been added. A photograph of the present electronics is shown in figure 33.

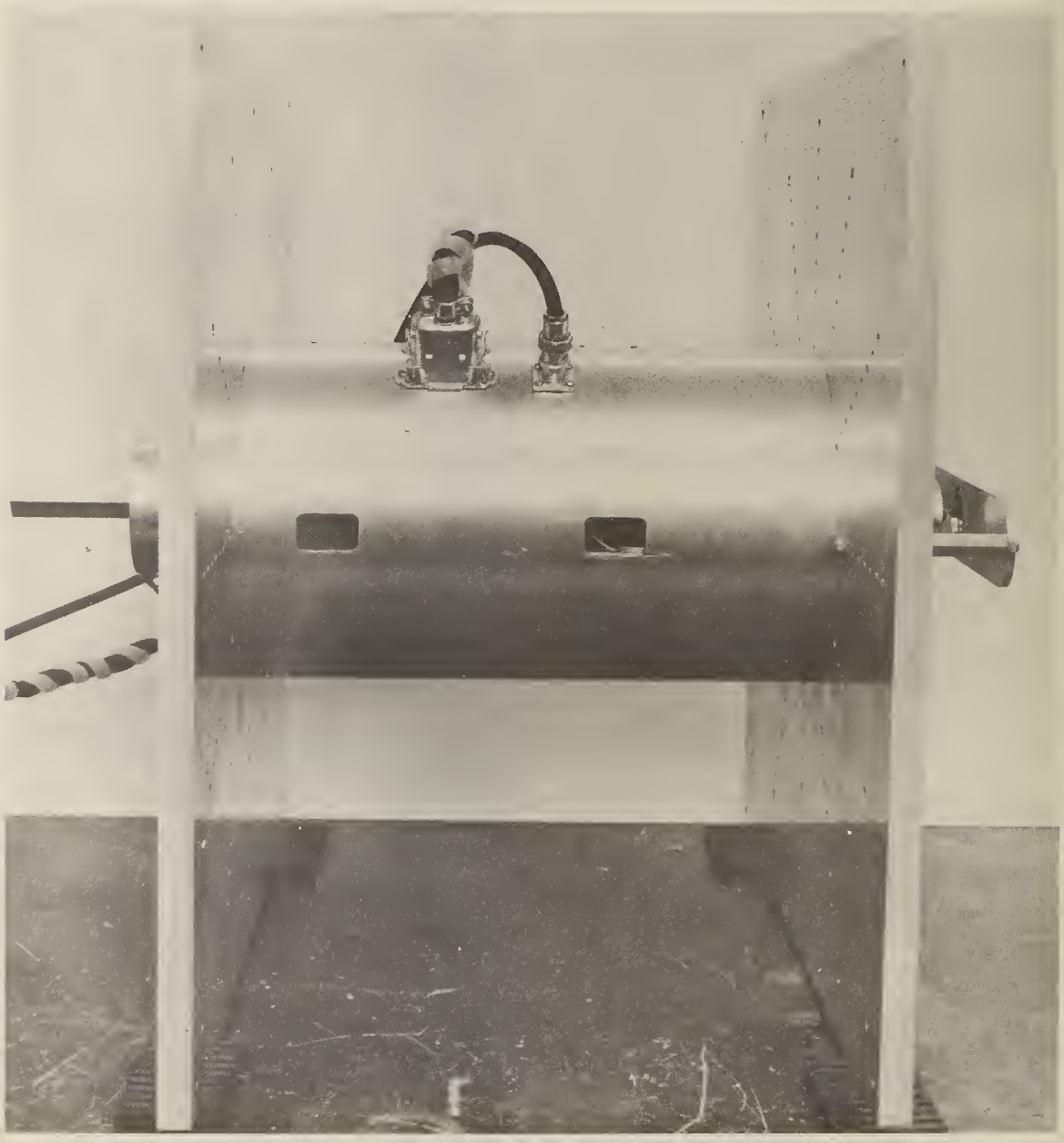

Figure 33. The main frame of the Doppler Drive.

(1) Power amplifier. A new complementary pair of signal transistors have been employed as the pre-drivers. They are to replace the 2N217 and 2N647. They come in a single package from Motorola and are designated MD985. Because they are silicon transistors, the two 22 kΩ resistors have been reduced to 10 kΩ to establish the correct bias (figure 34). It was determined that the amplifier has greater stability if the two pre-drivers have a larger power rating and are in thermal equilibrium with each other.

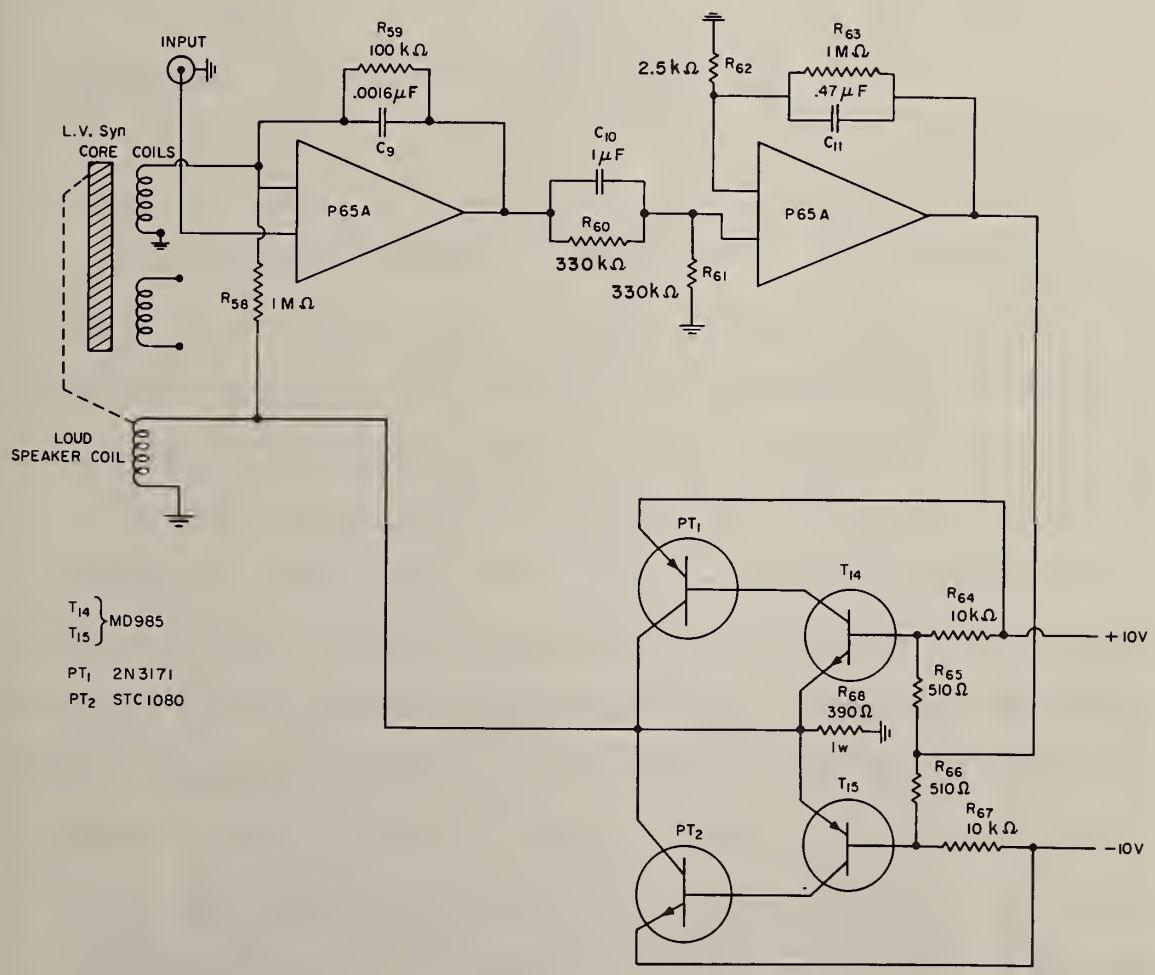

Figure 34. Schematic of Doppler Drive.

(2) Feedback loop. A change has been made in the feed-back loop which produced better velocity linearity (figure 34). The L.V. Coil, which was previously in series with the signal input and the first Philbrick P65A amplifier positive input has been placed between ground and the negative input of the first P65A amplifier. By removing the 2.4 henry coil from the input, the frequency response of the system has been improved. A one Megohm resistor has also been added from the output of the power amplifier to the negative input of the first P65A to D.C. stabilize the power amplifier.

(3) Detector gate control board. Another circuit board (figure 35) has been added to the electronics of the spectrometer. It has the following logic functions: (1) to produce a -20 volt output to inhibit the analyzer from storing when a spring loaded switch on the front panel is momentarily depressed downward, (2) to light an indicator lamp when the analyzer is not storing, (3) to produce a zero volt output which, in turn, allows the analyzer to store after the first address reset pulse arrives when the spring-loaded switch is held in the upwards position, (4) to produce a gated address reset pulse that can be counted by a scaler when the analyzer is storing, (5) to be able to inhibit the analyzer from storing when a preset count is reached by the scaler, (6) to amplify the voltage-to-frequency converter three volt output to ten volts so that it can be stored by the analyzer, (7) to invert the positive output of our single

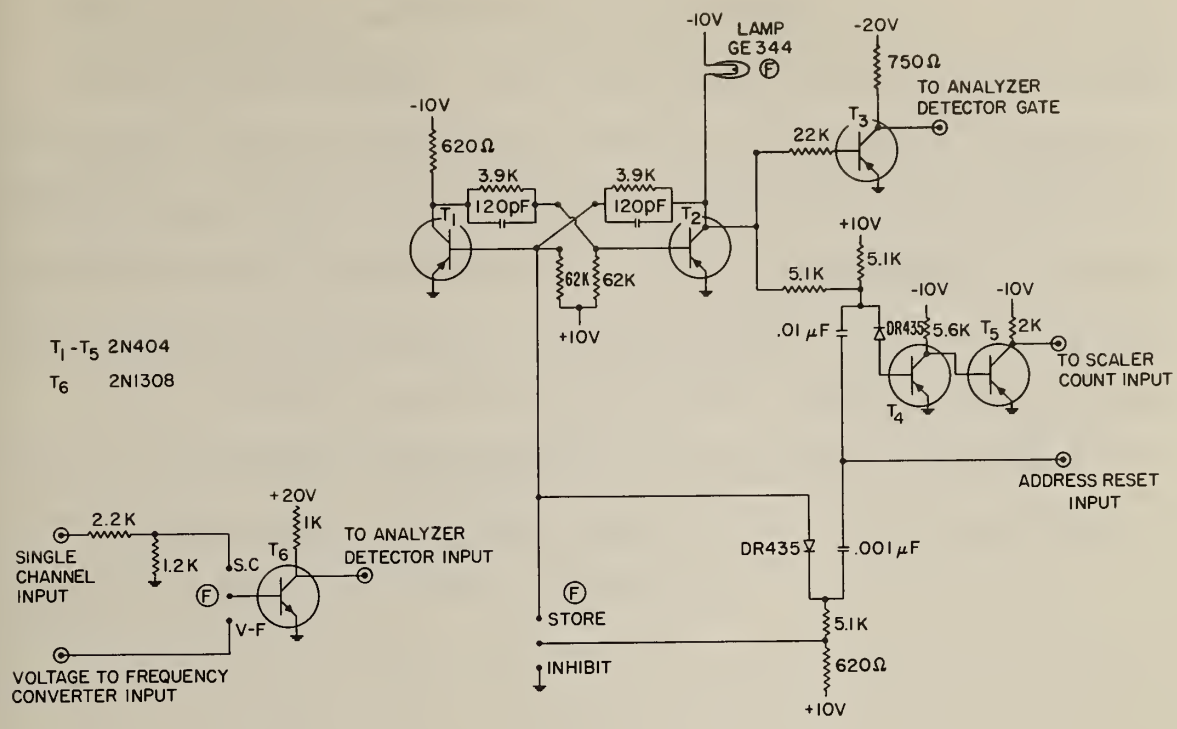

Figure 35. Detector gate control.

channel analyzer to a negative ten volts so that it can be stored by the analyzer.

The detector gate control is a convenient feature that was added to the electronics. It is designed so that one can accumulate counts for an integral number of sweeps. This enables one to test the spectrometer by using the voltage-to-frequency converter so that an integral number of sweeps can be made.

3. Conclusion

This spectrometer design meets all of the required criteria. It has operated trouble-free for one year, and

only minor modifications were required for special experiments. The modified spectrometer has linearity and reproducibility to better than 0.1% in the constant acceleration mode with a velocity range of 0.001 mm sec^{-1} and 20 cm sec^{-1}. The major improvement to the spectrometer as a result of these modifications lies in its greater reliability. Blueprints of the mechanical design can be obtained upon request.

The author would like to thank Joseph Brodely at N. B. S. Shops for his excellent machining assistance.

(F. C. Ruegg)

F. Cosine Effect in Mössbauer Spectroscopy

The Doppler effect has proven to be the most satisfactory method to obtain a Mössbauer spectrum. The frequency ν the absorber experiences for a relative velocity v with respect to a source of frequency ν_o is

$$\nu = \nu_o \left[1 + \frac{\vec{v}\,\vec{c}}{c^2} \right] = \nu_o \left[1 + \frac{v}{c} \cos \theta \right] \qquad (1)$$

where θ is the angle between the direction of motion and the γ radiation.

The corresponding energy change is

$$\Delta E = \frac{E_o}{c} v \cos \theta, \qquad (2)$$

which is directly proportional to the instantaneous velocity.

Since the radiation emitted by the source is isotropic, a range of velocity components are present for a Doppler velocity v_o, and corrections for this effect must be made. The corrections can be calculated from the angular distribution of the gamma radiation.

It is thus desirable to find the gamma-ray intensity which is detected as a function of the angle between the gamma radiation and the velocity vector. In figure 36 the geometry is shown for a circular planar source of radius Rs separated by the distance L from a circular planar detector of radius R_d. Considering only the gamma radiation emitted at the angle θ, and reaching the detector, a cone is obtained as shown by the shaded area. Only a fraction of the source

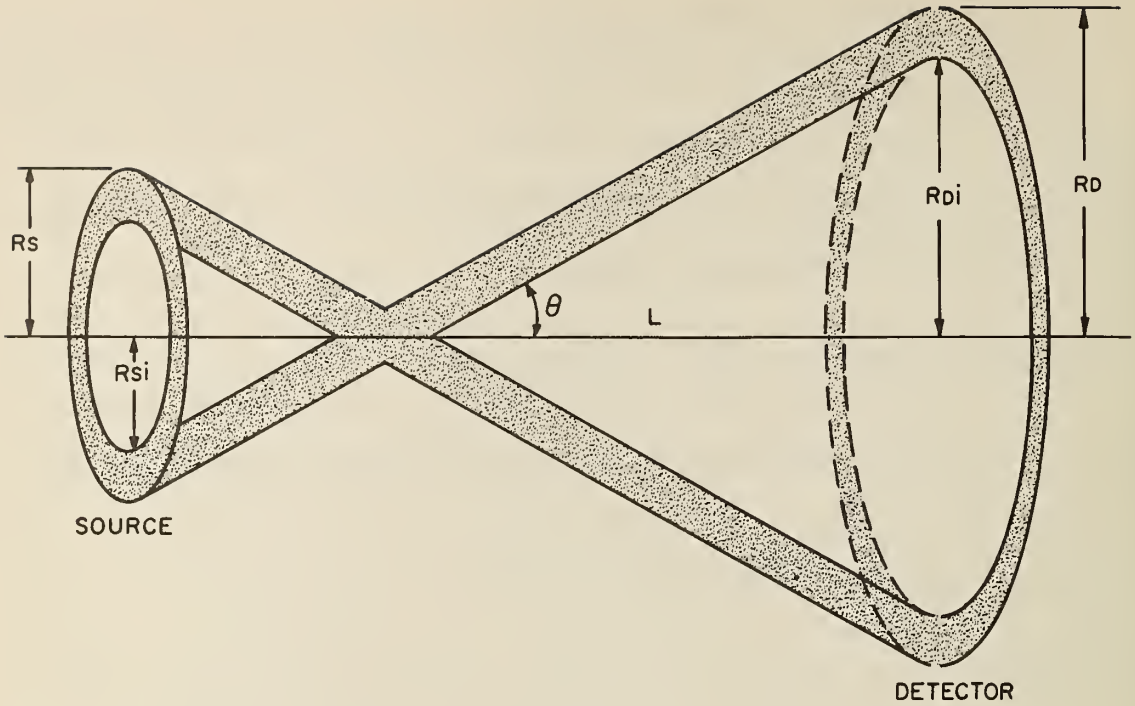

Figure 36. Geometrical relationship between source and detector for gamma rays emitted at angle β.

and the detector area are being utilized for this particular group of gamma rays. The partial count rate for an angle θ is thus

$$N(\theta) = N_o A_s(\theta) \cdot A_d(\theta)$$

$$\theta = \arctan V/V_o \qquad (3)$$

where $A_s(\theta)$ is the effective area of the source and $A_d(\theta)$, the effective detector area.

N_o can be obtained from the total count rate which is

$$N_o = \int_o^{\theta_{max}} N(\theta)_d \; \theta$$

$$\theta_{max} = \arctan \left[\frac{R_d + R_s}{L} \right], \text{ for } R_d > R_s. \qquad (4)$$

The effective source area can be calculated from the radius of source R_s and the detector radius R_d. Since

$$R_{si} = L \tan \theta - R_d,$$

$$A_s(\theta) = \pi \left[R_s^2 + \frac{(\theta_d - \theta)}{|\theta_d - \theta|} (L \tan \theta - R_d)^2 \right] \tag{5}$$

where $\theta_d = \arctan R_d/L$. This area is an anulus for $\theta > \theta_d$, a circle for $\theta = \theta_d$, and the sum of two circular areas for $\theta < \theta_d$ since for the last case the radiation from a point on the source can reach two points on the detector.

Likewise for the detector

$$A_d(\theta) = \pi \left[R_d^2 + \frac{(\theta_s - \theta)}{|\theta_s - \theta|} (L \tan \theta - R_s)^2 \right] \tag{6}$$

$$\theta_s = \arctan R_s/L$$

$$N(\theta) = \pi^2 N_o \cdot \left[R_s^2 + \frac{(\theta_d + \theta)}{|\theta_d - \theta|} (L \tan \theta - R_d)^2 \right] \left[R_d^2 + \frac{(\theta_s - \theta)}{|\theta_s - \theta|} (L \tan \theta - R_s)^2 \right] \tag{7}$$

The normalized counting rate $N(V/V_o)$ as a function of the ratio of the Doppler velocity V to the spectrometer velocity V_o for various apertures α is shown in figure 37. The source radius equals the detector radius, and the aperture is defined by α = Radius/L.

The smearing correction becomes important for apertures greater than $\alpha = 0.2$ (e.g. a 0.2 inch source at a distance of 1 inch for a 0.2 inch detector). Since most spectrometers are calibrated using a known absorber, the error is reduced.

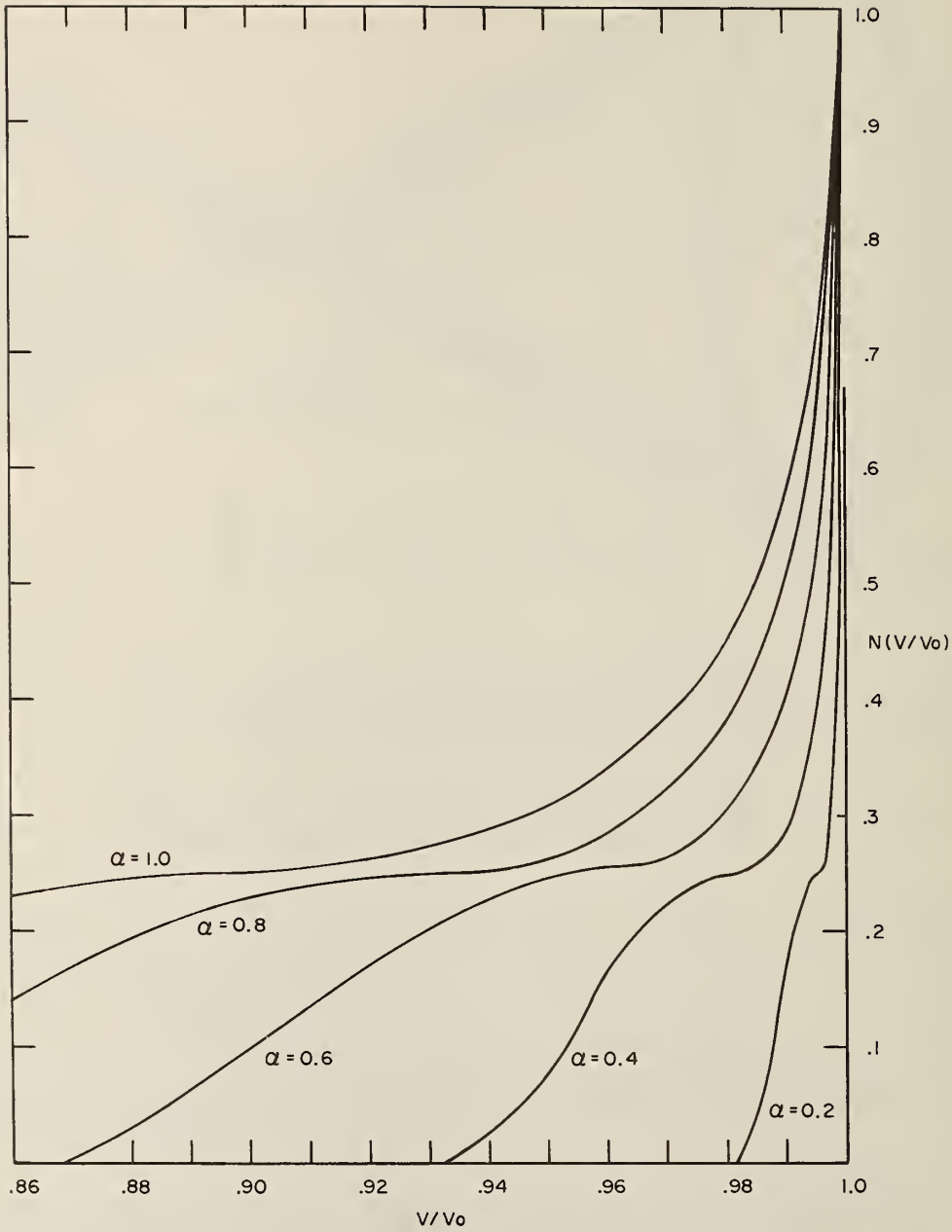

Figure 37. Normalized counting rate as a function of the ratio of Doppler velocity V to a spectrometer velocity V_o.

However, this smearing correction is not linear, and should be applied to the specific geometry used. The trend in Mössbauer spectroscopy is in high speed data acquisition, which is obtained by using stronger sources, and poorer geometry. In this case corrections can be made without significant losses in accuracy.

(J. J. Spijkerman)

G. The Sn^{119m}-Palladium Mössbauer Source

Existing Sn^{119m} Mössbauer sources show low recoilless fractions and large line widths at room temperature. A new source [20] has been prepared which has a line width which is nearly theoretical and which has a large recoilless fraction at room temperature.

The source, consisting of 10% by weight Sn^{118} along with Sn^{119m} produced by the (n,γ) reaction in palladium, was prepared by melting appropriate amounts of the two metals together in an atmosphere of argon.

The Sn^{119m} used to make the source had a radioactivity of 2.0 mCi and a radiochemical purity of 98%. The Sn^{119m} sample weighed 0.0410 grams. An amount of 99.9% pure palladium foil weighing 1.3554 g was tamped in an alundum crucible. The pellet of tin was placed in the crucible after about three fourths of the palladium had been tamped in place.

With the crucible in place, the apparatus was evacuated at about 0.1 torr for 30 minutes. Argon was then admitted and the system purged for 20 minutes at an argon flow rate

of about 50 cm^3/m.

The metals were outgassed by heating the crucible and contents to 800 ^oC for one minute. The temperature was then increased at a rate of 200 ^oC/min to 1600 ^oC. At this temperature the Pd just began to melt (1550 ^oC) and the alloy was formed. The temperature was maintained at 1600 ^oC for about 30 seconds before being lowered to 1000 ^oC. From 1000 ^oC the temperature was decreased 100 ^oC every thirty seconds to a level of 500 ^oC where the temperature was maintained for 10 minutes while the alloy annealed.

The alloy obtained had a shiny silver color. A negligible amount of Sn^{119m} distilled out of the crucible and deposited on the chamber walls. Virtually 100% of the alloy was recovered.

The source has a line width of 1.14 ± 0.02 mm/s using a natural (white) 0.005" tin foil. A 0.002" Pd foil filter was placed over the source to eliminate the Sn X-rays. Preliminary measurements show a recoiless fraction (f factor) greater than 70% at 20 ^oC.

The Sn-Pd source offers two important advantages over existing Sn^{119m} sources such as $Sn^{119m}O_2$ [21] and Mg_2Sn^{119m} [22], in that it has a very high f factor and a line width approaching the theoretical value of 0.64 mm/s at room temperature:

	Effect (%)	Line width mm/sec (corrected for absorber thickness)
$Sn^{119m}O_2$	12	1.5
Mg_2Sn^{119m}	4	0.9
Sn^{119m}-Pd	17	0.74 ± 0.02^a

[a]Standard deviation for a single determination.

The Pd-Sn alloy system will be further investigated, since this system shows great promise for a single line, Sn^{119m} source, with almost natural line width and a large recoil-free fraction at room temperature.

(D. K. Snediker and J. J. Spijkerman)

H. Abstracts of Papers and Publications

The following are abstracts of manuscripts accepted for publication during FY'65.

1. Ruegg, F. C., Spijkerman, J. J., and DeVoe, J. R., "Drift-Free Mössbauer Spectrometer", Rev. Sci. Inst. Vol. 36, 356-359, (1965)

"In order to eliminate drifts encountered in electromechanical Mössbauer spectrometers, a drive has been developed which is drift free with regard to velocity as well as position. The spectrometer can be driven in two modes: constant acceleration and constant velocity. The constant acceleration input signal is the analog output of the address scalers of a multichannel analyzer running as a multiscaler

(time mode). The constant velocity is obtained from a photocell slit system which drives the input of the spectrometer with a rectangular wave. In both modes, the photocell system is used to eliminate all position drifts by starting each new cycle from the same position. To analyze the velocity of the spectrometer a voltage-to-frequency converter and multichannel analyzer are used."

2. Spijkerman, J. J., Ruegg, F. C., and DeVoe, J. R., "A Standard Reference Material for Mössbauer Spectrometry of Iron and Its Compounds", Panel on the Application of the Mössbauer Effect in Chemistry and Solid State Physics, Vienna, April 1965, to be published.

"The rapid development of the Mössbauer effect has resulted in a new spectrometric method for chemical structure analysis. The various sources used in Mössbauer spectroscopy require a reference material to provide Mössbauer data on a uniform basis. A series of standard reference materials for Mössbauer spectroscopy will be made available from the National Bureau of Standards, U.S.A. The first in this series is a single crystal of disodium pentacyanonitrosylferrate dihydrate, $Na_2[Fe(CN)_5NO]\cdot 2H_2O$. The crystals are supplied by a commercial manufacturer, and calibrated by NBS on a Mössbauer spectrometer, using an optical fringe counting technique.

"The Mössbauer spectrum of a single crystal absorber,

cut along the bc plane, is a well resolved, symmetric doublet. The center of this doublet is defined as the zero reference point for the differential chemical shift, with the containing absorber at 25.0 °C. The absorber crystals supplied will be 1 cm x 1 cm, with 25.0 mg/cm^2 of natural iron."

3. Herber, R. H., and Spijkerman, J. J., "Mossbauer Line Broadening in SnO_2 Due to Twinning Effects", J. Phys. Chem., to be published.

"Stannic Oxide (cassiterite, SnO_2) in the tetragonal system, class 4/m 2/m 2/m. The space group is $P4_2/mm$, with two SnO_2 molecules per unit cell. The most detailed investigation of the structure of a single crystal SnO_2 by Marley and MacAvoy* showed a single Sn-O bond distance of 2.055 Å, with six oxygen atoms occupying the corners of an octahedron. This should lead to a vanishing field gradient tensor at the tin atom lattice point, and zero quadrupole splitting, if all of the O-Sn-O bond angles are either π or $\pi/2$. Mössbauer spectra of SnO_2 with Mg_2Sn^{119m} source (23.8 keV, $3/2 \rightarrow 1/2$ transition) showed definite, though not completely resolved, quadrupole splitting. This splitting is attributed to twinning, which was observed even in the best single crystals grown by the vapor transport method. This twinning occurs primarily in the (031) plane, so that the oxygen octahedron around the tin atom in the twin plane is slightly deformed

*J. A. Marley and T. C. MacAvoy, AFCRL-62-771 "Investigation of the Mechanism of Single Crystal Growth in High Temperature Systems; J. App. Phys. 32, 2504 (1961)

with a resulting non-vanishing electric field gradient tensor."

4. Spijkerman, J. J., Ruegg, F. C., and DeVoe, J. R., "Standardization of the Differential Chemical Shift for Fe^{57}", Proceedings of the Symposium of Mössbauer Effect Methodology, New York January (1964)

"To provide Mössbauer data for Fe^{57} on a uniform basis, to eliminate recalculation of data from various laboratories, and to provide tables of Mössbauer spectra, the National Bureau of Standards has included disodium pentacyanonitrosylferrate dihydrate, $Na_2[Fe(CN)_5NO]\cdot 2H_2O$, in the Standard Reference Materials Program. Single crystals of sodium nitroprusside will be available by April 5, 1965 for this standardization. The crystals are supplied by a commercial manufacturer, and calibrated by NBS on a Mössbauer spectrometer, using an optical fringe counting technique.

"The Mössbauer spectrum of a single crystal absorber, cut along the bc plane, is a well resolved, symmetric doublet. The center of this doublet is defined as the zero reference point for the differential chemical shift, with the containing absorber at 25.0 ^{o}C. The absorber crystals supplied will be 1 cm x 1 cm, with 25.0 mg/cm^2 of natural iron."

5. Ruegg, F. C., "A Flip-Flop with adjustable Bipolar Output", Electronics - Designers Casebook, to be published. (No abstract is available.)

5. RADIOISOTOPE TECHNIQUES

This group uses the principle of radioisotope dilution and radioactive indicators (radiometric techniques) to develop trace analytical methods. The standard radioisotope dilution method measures a change in specific activity of a radioisotope. Since this is often difficult to do directly for μg quantities of elements, Ruzicka [23,24] has developed a method called substoichiometric radioisotope dilution. Considerable difficulty in this method has been found with respect to maintaining good precision at very low concentrations. It is apparent that contamination can seriously affect the precision as well as the accuracy at the levels of ng/ml of many elements.

It appears that it is possible to apply the general principle of radioisotope dilution using radioisotopes to many chemical systems without the use of the principle of substoichiometry. In each of these procedures it is necessary to be able to determine a change in specific activity of a radioisotope before and after adding an unknown amount of stable element. Using a substoichiometric amount of reagent allows measurement of the ratio of "true" specific activities. In some of the other methods such a "true" ratio is not measured, but a ratio which is dependent upon the concentration of the desired element can be measured.

Radiometric techniques have been used in a number of analyses and this group is attempting to apply the technique

to the μg level and below.

The use of radioisotopes for trace analysis using the above principles has some inherent advantages. The techniques have very high sensitivity if the specific activity of the radioisotope is high. The cost is less than many other trace analytical methods and the procedures, although they are not automated at present, are amenable to it. The main disadvantage from which most other trace analytical methods suffer (except activation analysis) is that the reagent blank can be appreciable. However, presuming that most laboratories which are producing or analyzing very pure materials have been able to resolve their contamination problems (i.e. they do produce a pure substance), these techniques should allow trace analysis at a reasonable cost in time and equipment.

A. A Method of Trace Element Analysis With Radioisotopic Tracers in a System Using Heterogeneous Equilibrium

1. Introduction

This method is based upon the fact that it is possible to alter the distribution of an elemental species between two phases by altering the initial concentration of the first phase. By combining this process with the change in specific activity of a radioisotope present initially in the first phase that results by changing the initial concentration, one obtains a relationship between the initial concentration in the first phase and the distribution of radioactivity between the two phases for a constant amount of radioisotope.

It is necessary to separate the two phases, of course, and to measure the radioactivity in each one. One system that has been investigated is the separation of cobalt on manganese dioxide impregnated in chromatographic paper.

2. Experimental

To evaluate the method, model solutions of cobalt nitrate and solutions containing NBS Standard Reference Material (671, 672, and 673) of nickel oxide were analyzed. The nickel oxide samples contained traces of Fe, Cu, Mn, Mg, Al, and Ti.

a. Preparation of paper. The manganese dioxide paper is prepared by impregnating strips of chromatography paper (4 cm x 45 cm) in a bell jar, using an ascending flow, with 0.5 M manganous chloride. After drying, the manganese dioxide paper is dipped into a solution mixture containing 15 ml of 30% hydrogen peroxide diluted to a liter with 1 N sodium hydroxide to precipitate the manganese dioxide on the paper. The oxidation step takes 4 minutes in order to obtain a uniform manganese dioxide precipitate throughout the strip of paper. The manganese dioxide paper is then washed in distilled water and air dried.

b. Analytical Procedure. The nickel oxide Standards were dissolved in 9 M hydrochloric acid and diluted to volume so that 100 ml of solution contained 10 g of sample. To 50 ml beakers are added 1.00 ml of Co^{60} of known specific activity, known amounts of stable cobalt, 7.00 ml of ammonia-ammonium hydrochloride buffer (pH 10.50), 0.100 ml of the

Standard and enough distilled water to make a constant aqueous volume of 11.1 ml in all sample beakers. Then to each sample solution is added the pre-weighed piece of manganese dioxide paper (approximately 15 mg) and a magnetic stirring bar. Each beaker was covered with parafilm to prevent evaporation. The samples are stirred for forty minutes with a magnetic stirrer and allowed to stand for five hours with occasional stirring. After five hours the radioactivity of 1.00 ml aliquots of sample solution are measured and the manganese dioxide paper is removed, washed with distilled water, dried and counted. Likewise, a blank sample solution containing all the constituents mentioned above except the stable cobalt is carried through the same procedure.

c. Method of Calculation of Results. After obtaining the number of counts on the manganese dioxide paper, the counts per minute per gram of paper is calculated and a plot of the amount of cobalt adsorbed on the paper versus the total concentration of cobalt added can be obtained. A least squares fit of the data is made to a straight line function.

3. Results and Discussion

The experimental method of preparation of manganese dioxide paper was investigated using Whatman Nos. 1, 3, 4, 45, and 54 paper. Whatman Nos. 1 and 54 gave the most satisfactory results because they are not decomposed by the

oxidizing agent. The manganous ion can be oxidized to manganese dioxide by alkaline peroxide, hypochlorite, and potassium permanganate. The use of the alkaline peroxide gave the most reproducible results.

The contact time was optimized to allow equilibration with manganese dioxide paper. The conditions which gave the best results were stirring the solution for forty minutes and allowing the solutions to stand for five hours with occasional stirring. If the solutions are stirred continually for five hours the paper will decompose slightly.

The sensitivity of the method using synthetic test solutions appears to be 1×10^{-4} μg/ml for cobalt and the relative standard deviation of a single determination is 1% at the 0.1 μg/ml level, 20% at the 0.001 μg/ml level and 50% at the 0.0001 μg/ml level. Preliminary results indicated a maximum sensitivity of 0.1 μg for silver and cadmium, 0.01 μg for iron (III), 0.001 μg for zinc and thallium, and 0.0001 μg for nickel.

A standard curve for the analysis of NBS Standard Reference Materials No. 673 is shown in Figure 38. The following straight line function was determined by least squares analysis:

$$Y = -2.54 \times 10^{9} X + 2.69 \times 10^{5}$$

where Y = radioactivity of Co^{60} on the paper, C, min^{-1} g^{-1}

X = concentration of stable cobalt added mole/l

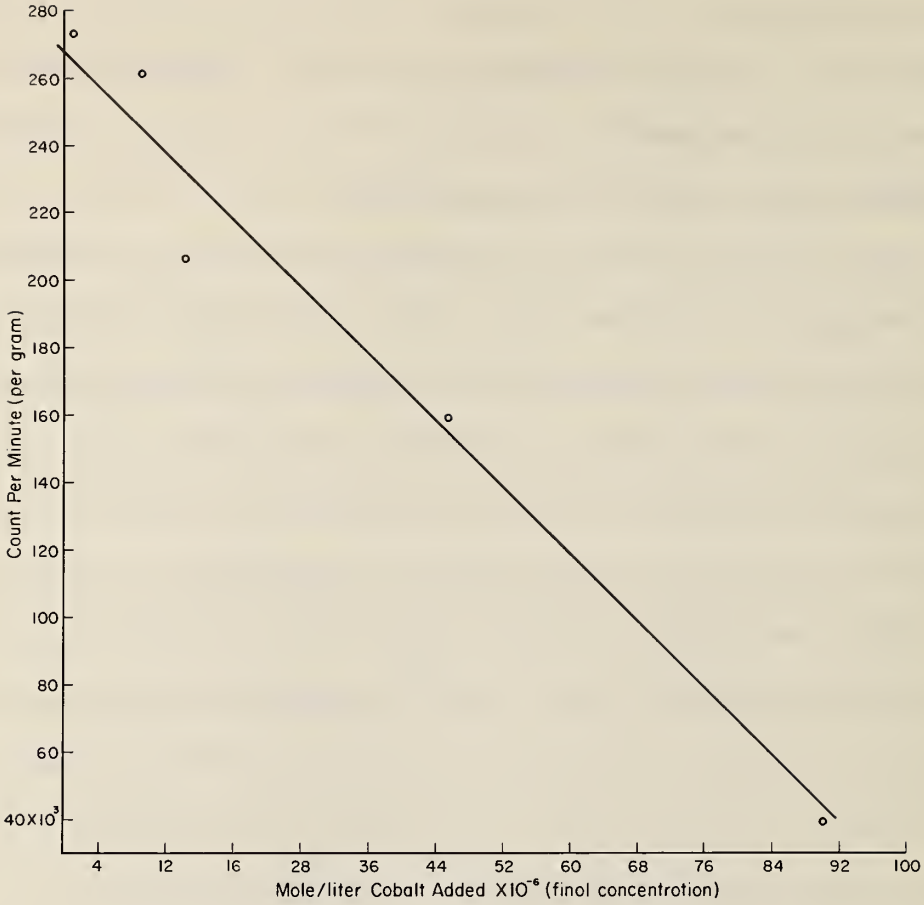

Figure 38. Least square fit to straight line Standard Reference Material No. 673.

The values of X are calculated for the Standard Reference Materials from this equation and are shown in table 8. The method appears to be fairly accurate since agreement with the reported value is within about 3%. Although the levels of concentration are high, the concentration of the final solution that was analyzed is 3 μg/ml. The precision obtained is comparable with that of the test solutions. Further study of the technique will be made at lower levels of

Table 8. Determination of cobalt in NBS Standard Reference Material Nos. 671, 672 and 673 of nickel oxide.

Standard Reference Material No.	Reported value (%)	Value found[a] (%)
671	0.31	0.30 ± .0025
		0.298 ± .0019
672	0.55	0.546 ± .0021
673	0.016	0.0164 ± .0026

[a]Average of five determinations. Error is standard deviation of a single determination.

(A. R. Landgrebe and L. T. McClendon)

B. Differential Controlled-Potential Coulometry Utilizing Radioisotopic Tracers

1. Introduction

This electroanalytical method which employs radioisotopes is based upon simultaneous electrolysis at controlled-potential of a sample and a standard in two identical cells connected in series. Under the conditions of the analysis, the same number of equivalents are deposited in the standard cell and in the sample cell. The radioisotope dilution principle is then applied to obtain the concentration of an element in the unknown material.

A differential procedure is used which involves the addition of equal, known amounts of the element to be analyzed and a radioisotope of that element to each cell.

The unknown concentration of that element is then added to the sample cell. Since the same number of equivalents are deposited in each cell, a mass balance relationship permits the calculation of the unknown amount of element.

In this method, two electrolytic cells are connected in series and the potential control is maintained between the mercury pool cathode and S. C. E. in the first cell referred to as the standard cell. (The second cell is referred to as the sample cell). Prior to the start of the electrolysis, atmospheric oxygen must be removed from the solutions to be electrolyzed. The elimination of oxygen is necessary because it is reduced at the mercury cathode in two steps:

1. $2H^+ + O_2 + 2_e^- = H_2O_2$ E = -0.1 volt vs. S. C. E.
2. $2H^+ + H_2O_2 + 2_e^- = 2H_2O$ E = -0.9 volt vs. S. C. E.

Let us consider what happens in the standard cell when an amount of electroactive species, M^{+n} is introduced and electrolyzed. The potential control is maintained at a value where the only reaction that takes place at the mercury pool is $M^{+n} + ne^- \rightleftharpoons M(Hg)$. The current arising from the reduction of M^{+n} will follow the equation $i_t = i_o e^{-kt}$ where i_o, i_t is current at time o and t, respectively, K = constant. Next, let us consider what happens at the cathode of the sample cell. The potential of the cathode in this cell will be determined essentially by the current passing through it and is a function of the concentration in the standard cell.

Consider the case when the sample cell contains only inert supporting electrolyte. In this case the only reduction reaction which can occur is the reduction of hydrogen ion and the potential of the cathode will shift in the negative direction to a value where that reaction occurs. For the cases where equal amounts of M^{+n} are added to each cell, the potential of both cathodes will be identical if the cell constants, K for each cell are identical. When an excess of M^{+n} is added to the sample cell, a measurable shift of electrode potential occurs in the positive direction. The potential of this electrode can be measured throughout the duration of the electrolysis and must be known in order to be assured that only the desired electrode reaction takes place. The number of coulombs passing through the sample cell will deposit an amount of M equal to that deposited in the standard cell for the case where both cells contain equal concentration of M^{+n} and when the sample cell contains an excess of M^{+n}.

The requirements for quantitative measurement are: (1) the potential of the cathode is controlled to exclude undesired electrode reactions, (2) the sample cell contains a larger concentration of material to be determined than the standard cell and (3) equal volumes of solutions are present in both cells. The difference in concentration between cells can be determined. The analysis for this concentration difference can be accomplished by measurement of the current

via an integration procedure. Another approach was devised which uses radioisotopic tracers in the analytical procedure as a type of radioisotope dilution (see part D).

A mass balance relationship was derived using the radioisotopic dilution principle and can be written in the form

$$\left(1 - \frac{a_1}{a_t}\right)\left(M + M^*\right) = \left(1 - \frac{a_2}{a_t}\right)\left(M + M^* + \Delta M\right) \qquad (3)$$

where a_1 and a_2 new refer to counts per minute of the radioisotope, M*, left in the standard and sample cells, respectively, after a finite electrolysis time; a_t is the total radioactivity in counts per minute added to each cell, ΔM is the unknown weight of the analyzed element added to the sample cell, and M is the known weight of element added to each cell. When $\left[M^*\right] \ll \left[M\right]$, and the volumes in each cell are identical, the above equation can be written in the form

$$\Delta M = M\left(\frac{a_2 - a_1}{a_t - a_2}\right) \qquad (4)$$

3. Experimental

a. Apparatus. A diagram of the apparatus employed is shown in Figure 39.

The electrodes consist of platinum helical anodes isolated from the solution by glass tubes with fritted discs of fine porosity and mercury pool cathodes about 3 cm^2 in area. The reference electrode is a saturated calomel electrode with a fiber tip. Stirring of the mercury pools is

accomplished by means of magnetic stirring bars. Prior to the start of the electrolysis, prepurified tank nitrogen is passed through each cell for 30 minutes in order to remove atmospheric oxygen. A nitrogen atmosphere is maintained above the solution during the electrolysis. Removal of oxygen is also accomplished by pre-electrolysis of the solutions at -0.500 volt vs. S. C. E.

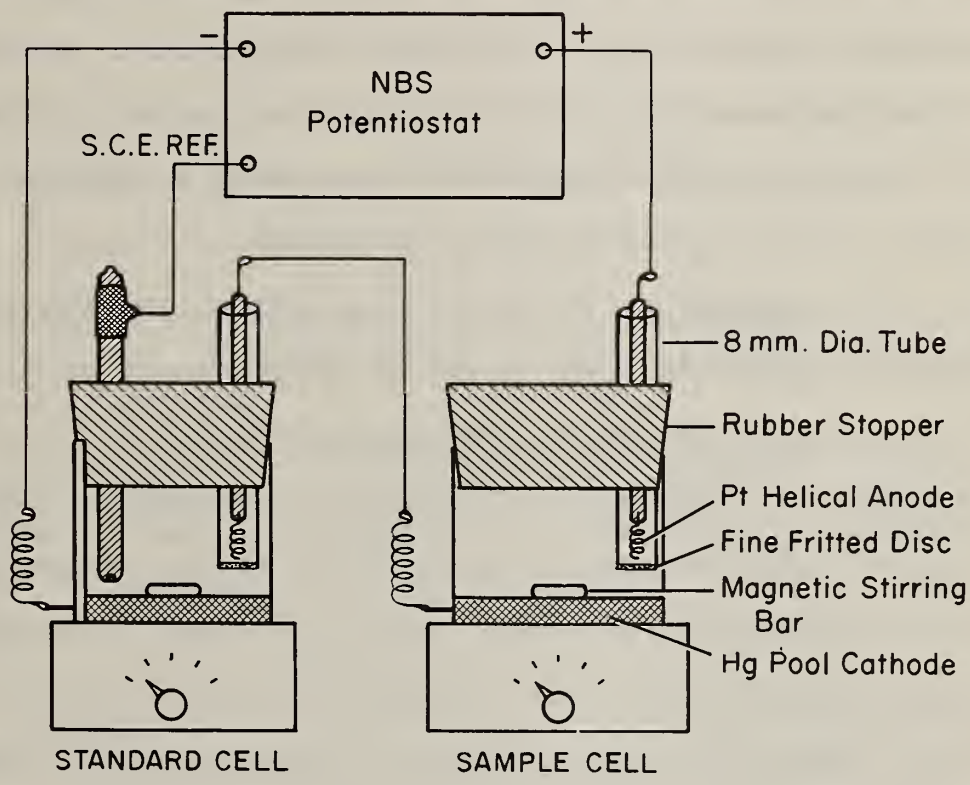

Figure 39. Apparatus for differential controlled-potential coulometry.

An automatic sample changer and scintillation counter with a well-type NaI(Tl) crystal, a controlled-potential coulometer, and a stopwatch are also used in these experiments.

A potentiostat was built according to the design of Connally and Scott as described in their report [27]. Details on the operation of this instrument are given in their report. The quantity of electricity is related to the bulk concentration of analyzed material which is oxidized or reduced at a controlled potential, and is usually measured by electronic integration to a reported precision of ±0.05% (standard deviation of a single determination) [27]. To obtain precise and accurate results in the analysis, the potential control must be maintained within relatively narrow limits (±10 millivolts). Several modifications are being made to improve this system and will be reported at a later date.

b. Reagents. The stock solution of cadmium (II) was made by dissolving 1.25025 gms of spectrograde cadmium oxide in a minimum amount of perchloric acid and by diluting with demineralized water to 500.0 ml in a volumetric flask. This working solution contained 2.1885 mg/ml of cadmium (II). The demineralized water was prepared by passing it through a mixed bed ion exchanger and distilled twice in quartz. The supporting electrolyte was prepared by dissolving ACS grade potassium nitrate in demineralized water.

c. Procedure. To each of the cells is added 10.0 ml of 0.1 N potassium nitrate followed by 1.00 ml of cadmium (II) solution containing Cd^{109}. After air is expelled with nitrogen for 30 minutes, 1.00 ml of solution is withdrawn from each cell and counted. The potential is controlled at -0.664 volts

vs. S. C. E. and electrolysis is carried out for either 10.0 or 20.0 minutes. Syringe pipettes are inserted into both cells and 3 ml of solution are withdrawn simultaneously from each cell. Then 1.00 ml of each of the 3 ml solutions is accurately transferred to a test tube in the automatic well counter and counted for ten minutes.

4. Results and Discussion

The preliminary studies carried out to date include observing the behavior of the system when equal concentrations of cadmium are placed in both cells and when the sample cell contains a greater concentration than the standard cell. These studies are tabulated in table 9.

Table 9. Differential controlled-potential coulometry of cadmium ideal solutions in 0.1 KNO_3.

Standard Cell	Sample Cell	Difference between sample cell and standards[a] Calculated	Found (avg.)	No. of Determinations
1.1366[b]	1.1366[b]	0.0000[b]	0.01682[b] ± .0195[b]	4
2.29[b]	4.58[b]	2.29[b]	2.308[b] ± .0452[b]	7
1.00[c]	1.00[c]	0.0000[c]	0.10[c] ± .0764[c]	10
0.10[c]	0.10[c]	0.0000[c]	0.00886[c] ± .00558[c]	10
23.6[c]	46.36[c]	22.7[c]	21.7[c] ± 8.64[c]	10
250[c]	500[c]	250[c]	268.0[c] ± 11.03[c]	10

[a]Errors are standard deviation of single determination.

[b]Weight in milligrams.

[c]Weight in micrograms.

5. Conclusion

The precision of the difference measured between the amount of the element in the sample and in the standard cell is about 5% (standard deviation) of the total amount in each cell. In addition to the poor precision, some difficulty exists with the accuracy of the method assuming that the standard cadmium solution has the proper titer. These problems are now under study and several variables have been found to be responsible for the lack of precision.

Although we have not as yet applied the system successfully to the μg levels, the high specific activity of many radioisotopes should provide high sensitivity with this method. Future work will consist of applying the radioisotopic principle at trace concentrations to characterize the mass transport properties of the system and to investigate the factors governing the sensitivity and precision of the method.

(P. A. Pella and A. R. Landgrebe)

C. Some Results on the Substoichiometric Radioisotope Dilution Trace Element Analysis of Silver and Iron.

1. Introduction

The part of this paper on silver analysis was presented at the ACS fall meeting in 1964 and the iron analysis at the American Nuclear Society meeting November 1964.

Radioisotopic dilution analysis described first by Hevesy and Hobbie [28] is based on the determination of the

Radioisotopic dilution analysis described first by Hevesy and Hobbie [28] is based on the determination of the change of specific activity caused by mixing a radioisotope with the naturally occurring element to be analyzed. The component to be analyzed must be isolated in a pure state and the change in the specific activity of this part is determined. Prior to the last few years, the method of radioisotopic dilution analysis has not been used to analyze trace amounts of inorganic substances because the measurement of specific activity of small amounts of the separated component is difficult. These difficulties were manifest by the problem in obtaining very pure separations of these small quantities. The method of substoichiometric radioisotope dilution analysis [23] reduces the severity of these difficulties.

Substoichiometric radioisotopic dilution analysis requires that the experimenter separates the same number of atoms from the bulk of the system before and after radioisotopic dilution. This can be accomplished in two ways: (1) Always remove the same number of atoms from solution. Solvent extraction, using a substoichiometric amount of complexing reagent in the organic phase, is an example of this. (2) Always have the same number of atoms left in solution. The formation of a complex combined with the separation of the noncomplexed ions by some means, such as ion exchange, is an example of this method.

Single radioisotopic dilution analysis is described by the equation:

$$X = Y\left[\frac{A_1}{A_2} - 1\right] \qquad (1)$$

where X is the weight of the unknown and Y is a known total weight of the element in the radioisotope, A_1 is the specific activity of the radioisotope, and A_2 is the resultant specific activity of the radioisotope after the addition of the element to be analyzed. Specific activity can be defined as:

$$A_1 = \frac{a_1}{m_1} \text{ and } A_2 = \frac{a_2}{m_2} \qquad (2)$$

where a_1 and a_2 are the activities in counts per minute (C/min) and m_1 and m_2 are the isolated weights of the element before and after radioisotopic dilution, respectively. When the same amount of the element is isolated with a substoichiometric amount of reagent, $m_1 = m_2$.

Then in relation (1), the specific activities can be replaced directly by relative activities measured under the same chemical conditions and counting geometry. Since very

$$X = Y\left[\frac{a_1}{a_2} - 1\right] \qquad (3)$$

small amounts can be isolated with good precision, this method is very useful for trace analysis. [24,25,26,29,30,31]

A method of internal standardization of the system is double radioisotopic dilution. The analysis is carried out as follows. Different but known weights, W_1 and W_2, of

naturally-occurring element to be analyzed are added to equal aliquots of the sample containing an unknown weight, W_x, of the element along with a weight W_t of radioisotopic tracer. An equal weight of the element is separated from each aliquot through the use of a substoichiometric amount of reagent and their relative activities are determined. If the weight of radioactive tracer is negligible with respect to W_1, W_2, and W_x, the following formula can be used:

$$W_x = \frac{a_2W_2 - a_1W_1}{(a_1-a_2)}$$

a_1 and a_2 are the radioactivities (C/min) of the aliquots containing equal amounts of $(W_x + W_1)$ and $(W_x + W_2)$, respectively, after successive radioisotopic dilution.

An extraction procedure for silver using dithizone as the substoichiometric reagent with EDTA as a complexant to reduce the effect of interfering elements was devised.

A method was developed for iron using a substoichiometric amount of the sequestering reagent, EDTA. The non-complexed ions were removed with a cationic exchanger (Dowex 50-X8) leaving a constant amount of iron EDTA complex in solution.

2. Experimental

NBS certified Standard Reference Material Sample No. 124d, which contained Cu 83.6%, Pb 5.2%, Zn 5.0%, Sn 4.6%, Ni 1.0%, Fe 0.18%, Sb 0.17%, and Ag 0.02% was analyzed for its silver content as were cartridge brass standards Nos.

C1100, 1101, C1101, C1102, and 1102 which contained Cu (67-73)%, Zn (32-27.1)%, plus trace amounts of Pb, Fe, Sn, Ni, Al, Sb, As, Be, Bi, Cd, Mn, P, Si, Ag, and Te. NBS Standard Samples (671, 672, and 673) of nickel oxide were analyzed for iron. These samples contained trace amounts of Co, Cu, Fe, Mg, Mn, Si, Ti, Al, and Cr.

a. Equipment. An automatic sample changer with a sodium iodide scintillation well counter ($1\frac{3}{4}$ x 2 inch diameter with a $\frac{3}{4}$ inch diameter x $1\frac{1}{2}$ inch well) was used. A pH meter capable of measurement to 0.01 pH units, a wrist-action mechanical shaker, 60 ml glass stoppered separatory funnel, and counting tubes were also used. An ion exchange column of borosilicate glass, 300 x 10 mm diameter was used.

b. Reagents and Purification. Precautions must be taken to keep the reagent blank small, so careful purification is necessary in order to eliminate the element to be analyzed from all chemicals in contact with the system.

All of the water was triple distilled in quartz and stored in polyethylene containers. Disodium ethylenedinitrilotetraacetate (EDTA), Lot No. 26355 from J. T. Baker Company, and diphenylthiocarbazone (dithizone), Lot No. 712255 from Fisher Scientific Company, were found not to require further purification. All other salts and acids were of reagent quality and were purified by distillation or crystallization before use. Carbon tetrachloride, ACS reagent grade, was distilled twice. The acetate buffer, pH 4.5, was

prepared by dissolving 137 g of sodium acetate trihydrate and 60 ml of glacial acetic acid in the special distilled water and diluting to one liter. Radioactive silver, Ag^{110m}, $t_{\frac{1}{2}}$ = 270 days, was obtained from Oak Ridge National Laboratory. The Ag^{110m} with specific activity of 3130 mCi/g was diluted to the desired specific activity with stable silver nitrate solution. The Fe-59 ($t_{\frac{1}{2}}$ = 45d) with a specific activity of 31,800 mCi/g was diluted to the desired specific activity with stable ferric nitrate solution.

Ion exchange resin, Dowex 50 X-8, 20-50 mesh cannot be used without purification to remove trace amounts of iron and cobalt. The resin was washed with 30 bed volumes of demineralized water followed by elution with 6 N HCl to remove iron. After washing with 30 bed volumes of demineralized water, the resin was converted to the sodium form with a 5% solution of sodium hydroxide. The resin was treated with 60 bed volumes of a 1% solution of EDTA, followed by 30 bed volumes of demineralized water.

c. A procedure using single substoichiometric radioisotope dilution.

(1) Silver. A known amount of radioactive silver of specific activity Y was added to 10 ml aliquots of the aqueous solutions of the sample to be analyzed. The aqueous solutions were extracted with 2 ml of carbon tetrachloride containing dithizone. After shaking the solutions for thirty minutes, the organic phase was separated and the

radioactivity of a 1.00 ml aliquot of the organic layer (a_2) was measured. At the same time, a solution containing the same amount of radioactive silver of specific activity Y was extracted.

The radioactivity of a 1.00 ml aliquot of the carbon tetrachloride layer from the solution containing only the radioisotope was counted (a_1). The amount of silver was calculated by use of equation 3.

(2) Iron. The column containing 10 ml of ion exchanger was equilibrated with 60 ml of the same EDTA-buffer solution that is used in the influent. The influent contained 5 ml of EDTA solution, 5 ml of Co^{60} radioisotope solution, and varying amounts of stable cobalt as a test solution or in an unknown sample when conducting the analysis. The solution was diluted to 50 ml in a volumetric flask and the influent was passed through the column at a constant flow rate of 1 ml/min. The column was then washed with 30 ml of demineralized water. The combined effluent and wash were diluted to 100 ml, and a 1.00 ml aliquot was placed in a test tube for counting. For the single substoichiometric radioisotope dilution method the same procedure above is conducted twice; once on the radioisotope solution to give a_1, and once after dilution with the standard cobalt or the unknown sample to give a_2.

d. Procedure for substoichiometric radioisotopic dilution analysis of Standard Reference Materials.

(1) Single dilution procedure for silver. The NBS Standard Materials of ounce metal, Standard Material 124d, and the standards of cartridge brass, Nos. C1100, 1101, C1101, C1102, and 1102 were dissolved in nitric acid and evaporated to near dryness. Acetate buffer and a twofold excess of EDTA were added. This solution was heated at 60 °C for 30 minutes, then cooled to room temperature. The solution was diluted with acetate buffer so that 100 ml of solution contained 1.00 g of sample.

(2) Double radioisotopic dilution procedure for silver. When the samples were analyzed by the method of double radioisotopic dilution, they were dissolved in nitric acid and evaporated to near dryness. Acetate buffer and a twofold excess of EDTA were added. The naturally-occurring silver W_1 and W_2 containing the same amount of radioisotope were added to two equal weights of the same sample. In order to insure complete masking of the copper by EDTA, these solutions were heated to 60 °C for 30 minutes, then cooled to room temperature. The samples were diluted with acetate buffer so that 100 ml of solution contained 1.00 g of sample. Ten ml aliquots were extracted with 2.00 ml of dithizone in carbon tetrachloride in all experiments as before. One (1.00) ml aliquots were counted from each extract to give a_1 and a_2 which are used in equation 4 to calculate W_x.

(3) Single dilution procedure for iron. Ten grams of the nickel oxide NBS Standard Reference Materials (671, 672, and 673) were dissolved in 9 M HCl and passed through an anion exchange column which was prepared by washing it in 9 M HCl. The effluent from the column containing nickel was discarded. The columns were eluted with water and the solution was evaporated and then diluted to volume in a 50 ml volumetric flask. A 5 ml aliquot of this solution was then added to another 50 ml volumetric flask along with 5 ml of the Co^{60}, 20 ml of diethylamine buffer and 5 ml of 1×10^{-5} M EDTA. The solution (pH 11) was diluted to volume and passed through the ion exchange column. The effluent was diluted to 100 ml and a 1 ml aliquot was counted, using procedures indicated above.

2. Results and Discussion

The results of this analytical procedure for silver in a variety of brass standard reference materials (SRM) are shown in table 10 along with the emission spectroscopic results from which the SRM was certified.

Although several numbers on the precision of the spectroscopic method are missing, it appears that the radioisotope dilution methods, both single and double, have precision comparable to that of the spectroscopic method.

The amounts of silver in Standard Reference Materials C1100, 1102, and C1102 show reasonable agreement for the precision indicated between all of the methods. The poor

Table 10. Analysis for silver in brass samples.[a]

Method of analysis	Average concentration Ag (%) in Standard Reference Materials				
	C1100	1101	C1101	1102	C1102
Emission spectroscopy[b]	0.019±0.001	0.0028	0.0028±0.0002	0.0010	0.0010±0.0004
Double radioisotopic dilution[b]	0.018±0.002	0.0045±0.006	0.0057±0.009	0.0010±0.0001	0.0010±0.0001
Single radioisotopic dilution[c]	0.019±0.002	0.0034±0.0004	0.0032±0.0003	0.0006±0.0005	0.0011±0.0005
Recommended	0.019	0.003	0.003	0.0010	0.0010

[a]Errors are standard deviations of a single determination.

[b]Average of three determinations for spectrochemical and double radioisotopic dilution.

[c]Average of eight determinations for single radioisotope dilution.

precision and accuracy of the double method for 1101 or C1101 indicate a serious problem which has yet to be resolved. The single method for these samples shows good agreement for the precisions indicated (e.g. the differences of the averages could be due to chance variation).

The standard reference materials which were analyzed for silver contained so much copper that it was necessary to perform the analysis of these samples at pH 4.5 in an acetate buffer in order to increase the solubility of EDTA. The concentration of copper (II) ion in the presence of a two-fold excess of EDTA is insignificant (10^{-18} M) and the copper is not extracted under the conditions employed. Using EDTA as a masking agent permitted the determination of silver in high copper concentrations.

The results of the single dilution method using the cation exchange separation for iron in SRM nickel oxide are shown in table 11. The agreement is considered to be excellent for the precision obtained. This method using EDTA as a complexing agent is quite specific because few elements form as strong an EDTA complex as Fe III does.

We have had considerable difficulty in obtaining the precision which has been reported for iron using the same method as that of Ruzicka [26]. Our precision (standard deviation, single determination) varies from about 1% at the μg/ml concentration level to about 5% at the 10 to 100 μg/ml level. Other data at more dilute concentrations indicate a

precision as poor as 15% at the ng/ml level (see table 12). This is about four or five times less precise than much of the work of Ruzicka. We are now attempting to determine the cause of the relatively poor precision that we obtain for the parts per million levels and below. Variable reagent blanks are a possibility. Procedures which could introduce varying amounts of contamination such as surface contamination of containers or the entrance of dust particles into the system may also be the cause for lack of precision. It should be pointed out, however, that precisions obtained in this work compare very well with that obtained in most other trace analytical methods. Further results on this precision problem will be published at a later date.

Table 11. Single substoichiometric radioisotopic dilution analysis of nickel oxide for trace amounts of iron.

Standard reference material No.	Reported value	Average iron found[a,b] (%)
671	0.39	0.394 ± 0.004
672	0.079	.082 ± 0.003
673	0.029	0.029 ± 0.001

[a]Average of five determinations

[b]Error is standard deviation of a single determination

Table 12. Determination of trace-iron by single substoichiometric radioisotopic dilution analysis on ideal solutions.

Iron taken (X) (μg/ml)	Average iron found[a,b] (μg/ml)
2.24	2.28 ± 0.09
0.224	0.24 ± 0.012
0.0224	0.016 ± 0.002
0.00224	0.0017 ± 0.0002

[a]Minimum of 6 determinations.

[b]Error is standard deviation of a single determination.

The sensitivity of the method is limited by three factors. (a) There is a limit to which the organic reagent can be diluted and still retain the effect of substoichiometry. (b) The specific activity of the radioisotope must be high enough to result in significant dilution. (c) At low concentrations the element may be adsorbed by the glass, e.g., at 10^{-7} g/ml. The last factor is an error inherent in all trace analytical methods for silver. No attention has been paid to the value of a preconcentration step to further extend the sensitivity. Even though great care must be paid to ascertain that no contamination occurs during preconcentration some applications of this method

may require it. A very great advantage in the substoichiometric technique is its simplicity, and the fact that no specialized capability of the analyst beyond that which he uses routinely is necessary (e.g., complexometry in solution chemistry). The equipment required is available from a variety of sources and less than microcurie amounts of radioactivity are used. It must be remembered that chemical exchange between the radioisotope and its stable isotopes is a requirement for radioisotope dilution. It is possible (usually through a series of repeated oxidation and reduction steps) to obtain good chemical equivalence between the isotopes. The advantages which apply to regular isotope dilution apply here also (e.g., quantitative yields are not necessary). For this and the other reasons given above, this technique affords considerable saving in time and equipment when compared to most other trace analytical methods.

We wish to thank Robert Alvarez for performing the spectroscopic analysis of silver.

(A. R. Landgrebe, L. T. McClendon, and J. R. DeVoe)

D. <u>The Effect of Fluoride on the Distribution Coefficient of Ferric Thiocyanate in Isobutanol-Water</u>.

Iron (III) can be extracted from an acid solution as a ferrimonothiocyanate complex into isobutanol. The formation of the extractable species depends on the combined action of the anion of the metal and the organic solvent. This extraction system is referred to as an ion-association

type [32]. Addition of fluoride to an aqueous solution of $Fe(SCN)^{++}$ produces a fluoro complex

$$Fe(SCN)^{++} + nF^- \rightleftharpoons FeF_n^{(3-n)} + (SCN)^- \quad n = 2 \text{ to } 6$$

where the decolorizing action of fluoride on the ferric thiocyanate complex can be observed. The instability constants of $FeF_n^{(3-n)}$ where calculated by measuring this decolorizing action spectrophotometrically [33]. It was shown that at low concentrations of fluoride (corresponding to $[F^-] = 10^{-7}$ to 10^{-5} M) the predominant species was the ferrimonofluoride (FeF^+) complex. The step-wise instability constants were reported by Babko and Kleiner to be as follows:

$$K_{FeF^{++}} = \frac{[Fe^{+3}]\,[F^-]}{[FeF]^{++}} = 5 \times 10^{-6}$$

$$K_{FeF_2^+} = \frac{[FeF^+]\,[F^-]}{[FeF_2]} = 0.35 \times 10^{-4}$$

$$K_{FeF_3} = \frac{[FeF_2^+]\,[F^-]}{[FeF_3]} = 0.6 \times 10^{-3}$$

$$K_{FeF_4^-} = \frac{[FeF_3]\,[F]}{[FeF_4]^-} = 1 \times 10^{-2}$$

$$K_{FeF_5^{-2}} = \frac{[FeF_4^-]\,[F^-]}{[FeF_5]^-} = 0.44$$

The ferric fluoride complexes formed are not extracted into isobutyl alcohol. Thus a solvent extraction procedure was devised in the present study to investigate the distri-

bution coefficient of ferric thiocyanate as a function of fluoride ion concentration with the prospect of using the system as an analytical method for fluoride ion in the 10^{-6} g/ml range.

1. Experimental

Apparatus: An automatic sample changer and scintillation counter with a well-type NaI(Tl) crystal were used. A pH meter, capable of measurement to 0.01 pH units, and a mechanical shaker plus glass stoppered separatory funnels and 15 x 125 mm borosilicate glass counting tubes were also used.

Reagents: All the solutions were prepared from ACS reagent grade chemicals and doubly distilled water. The distilled water was prepared by passing it through a mixed bed ion exchanger and distilled twice in quartz. The sodium fluoride solutions were prepared by dissolving accurately known quantities of sodium fluoride in distilled water stored in polyethylene bottles.

Radioisotope: Fe^{59} ($t_{\frac{1}{2}}$ = 45 days) of specific activity 31,800 mCi/g was obtained from the Isotopes Division of the Oak Ridge National Laboratory. A stock Fe^{59} solution was diluted from 10.0 ml to 100.0 ml with distilled water. Measurement of the radioactivity of this stock Fe^{59} solution in the scintillation counter yielded a value of 2.4×10^4 counts per minute per milliliter.

2. Procedure

Aliquots (10-ml) of iron (III) nitrate tetrahydrate

solution in either perchloric or hydrochloric acid were added to a series of separatory funnels. To these funnels were added 2.00 ml of sodium fluoride solution, followed by 2.00 ml of potassium thiocyanate and 1.00 ml of Fe^{59} radio-reagent. The total volume was 15.0 ml. All concentrations referred to are the final concentrations present in the separatory funnels. These solutions were shaken for three minutes in a mechanical shaker with 10.0 ml of isobutanol. The phases were separated and 1.00 ml of each phase was pipetted into counting tubes and the radioactivity measured with the scintillation counter. The distribution coefficient was calculated from the relation:

$$K_d = \frac{[CPM]org}{[CPM]\ aq.} \times \frac{[Volume]\ aq.}{[Volume]\ org.}$$

The pH of all aqueous phases was measured.

3. Results

In Figure 40, K_d is plotted versus-log [NaF]. These extractions were made from perchloric acid. In all cases studied, a retention of Fe^{59} was observed in the aqueous phase as the fluoride concentration was increased. Conditions were chosen such that the fluoride ion was most effective in lowering the distribution coefficient of ferric thiocyanate. Curves A and B in figure 40 illustrate the increase in sensitivity of the $Fe(SCN)^{++}$ complex toward fluoride as the thiocyanate concentration is decreased from 0.20 M to 0.10 M. The distribution coefficient decreased

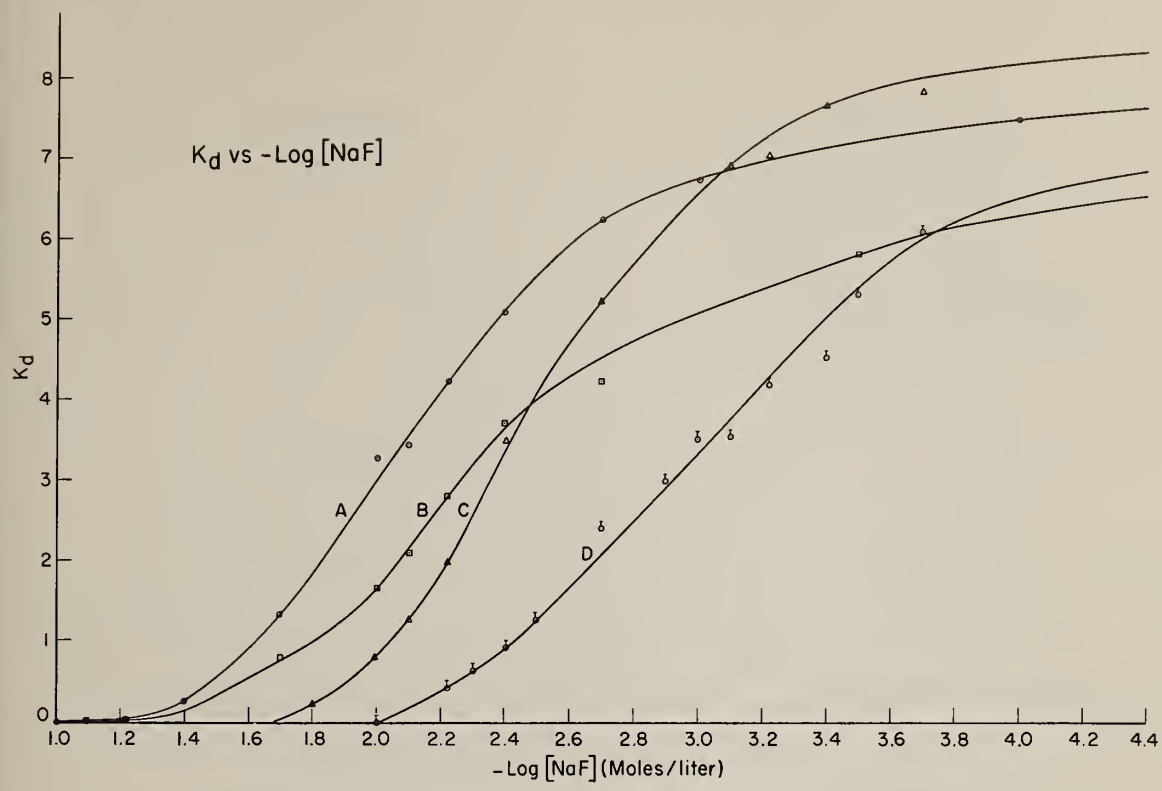

Figure 40. Distribution coefficient versus negative log of the concentration of sodium fluoride expressed in mole liter^{-1}.

Legend for Curves

A - (o) - Fe(III) = 1.0×10^{-2} M in 0.25 M $HClO_4$
SCN^- = 0.20 M
pH = 1.7

B - (□) - Fe(III) = 1.0×10^{-2} M
SCN^- = 0.10 M
pH = 1.8

C - (Δ) - Fe(III) = 1.0×10^{-3} M in 0.10 M $HClO_4$
SCN = 0.20 M
pH = 2.0

D - (ð) - Fe(III) = 1.0×10^{-3} M in 0.01 M $HClO_4$
SCN^- = 0.10 M
pH = 2.0

from 0.20 M to 0.10 M. The distribution coefficient decreased from 7.80 to 6.80 respectively. Curves C and D show the further shift in the curve toward smaller fluoride concentrations as the iron (III) concentration is reduced from 1×10^{-2} M to 1×10^{-3} M. As the iron (III) concentration is reduced to 1×10^{-4} M distribution coefficient decreased markedly as shown in figure 41. (No further shift of the curve toward smaller fluoride concentration was noted.)

In figure 42 is shown an analogous set of curves obtained when the extractions were made from hydrochloric acid. Curves B' and D' again illustrate the enhanced sensitivity of the $Fe(SCN)^{++}$ complex toward fluoride through a ten-fold decrease in the iron (III) concentration. A further reduction in the iron (III) or thiocyanate concentration produced no increase in sensitivity, but considerably decreased the distribution coefficient. Comparing these HCl curves with those obtained with $HClO_4$ (i.e. B and D), the decrease in the distribution coefficient upon the addition of fluoride is more pronounced when the extractions are made from $HClO_4$. From this series of curves it was concluded that conditions employed in figure 40, for curve D, exhibited the greatest sensitivity toward fluoride. The range of fluoride concentration most sensitive to this system was 2×10^{-4} M to 6×10^{-3} M. A plot of percent Fe^{59} retained in the aqueous phase versus milligrams of sodium fluoride is shown in figure 43. A linear response was observed for the

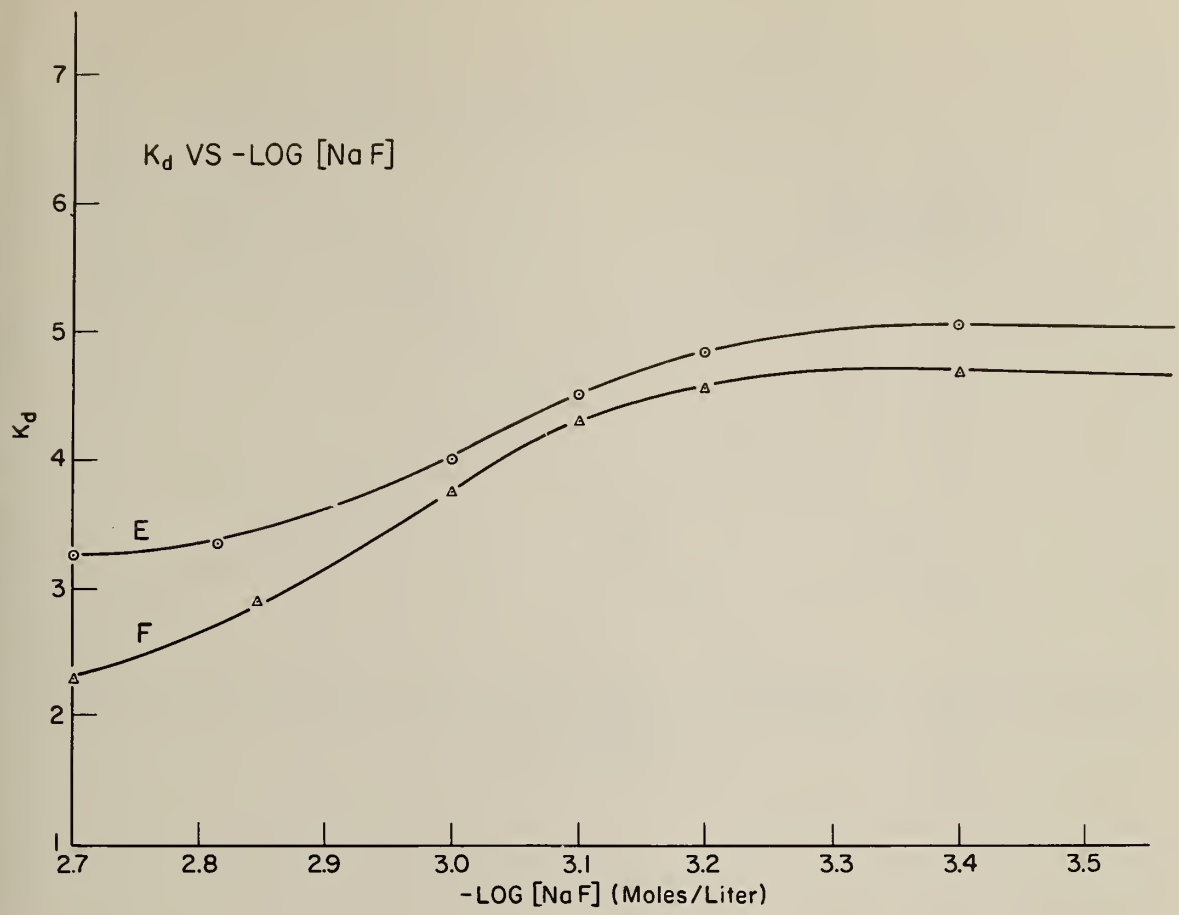

Figure 41. Distribution coefficient versus negative log of the concentration of sodium fluoride expressed in mole liter^{-1}.

Legend for curves

E - (o) - Fe(III) = 1.0×10^{-4} M
SCN- = 0.20 M
pH = 3.2

F - (Δ) - Fe(III) = 1.0×10^{-4} M
SCN- = 0.10 M
pH = 3.3

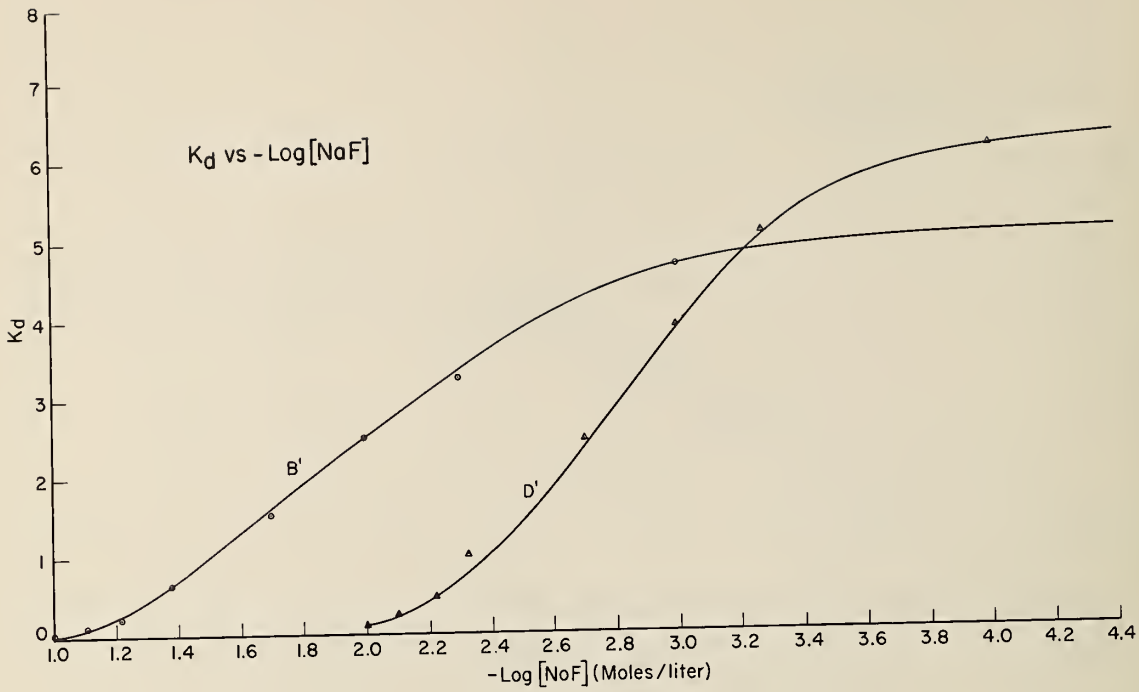

Figure 42. Distribution coefficient versus negative log of the concentration of sodium fluoride expressed in mole liter^{-1}.

Legend for curves

B' - (o) - Fe(III) = 1.3×10^{-2} M in 0.07 M HCl
SCN^- = 0.133 M
pH = 1.2

D' - (Δ) - Fe(III) = 1.3×10^{-3} M in 0.007 M HCl
SCN^- = 0.133 M
pH = 2.2

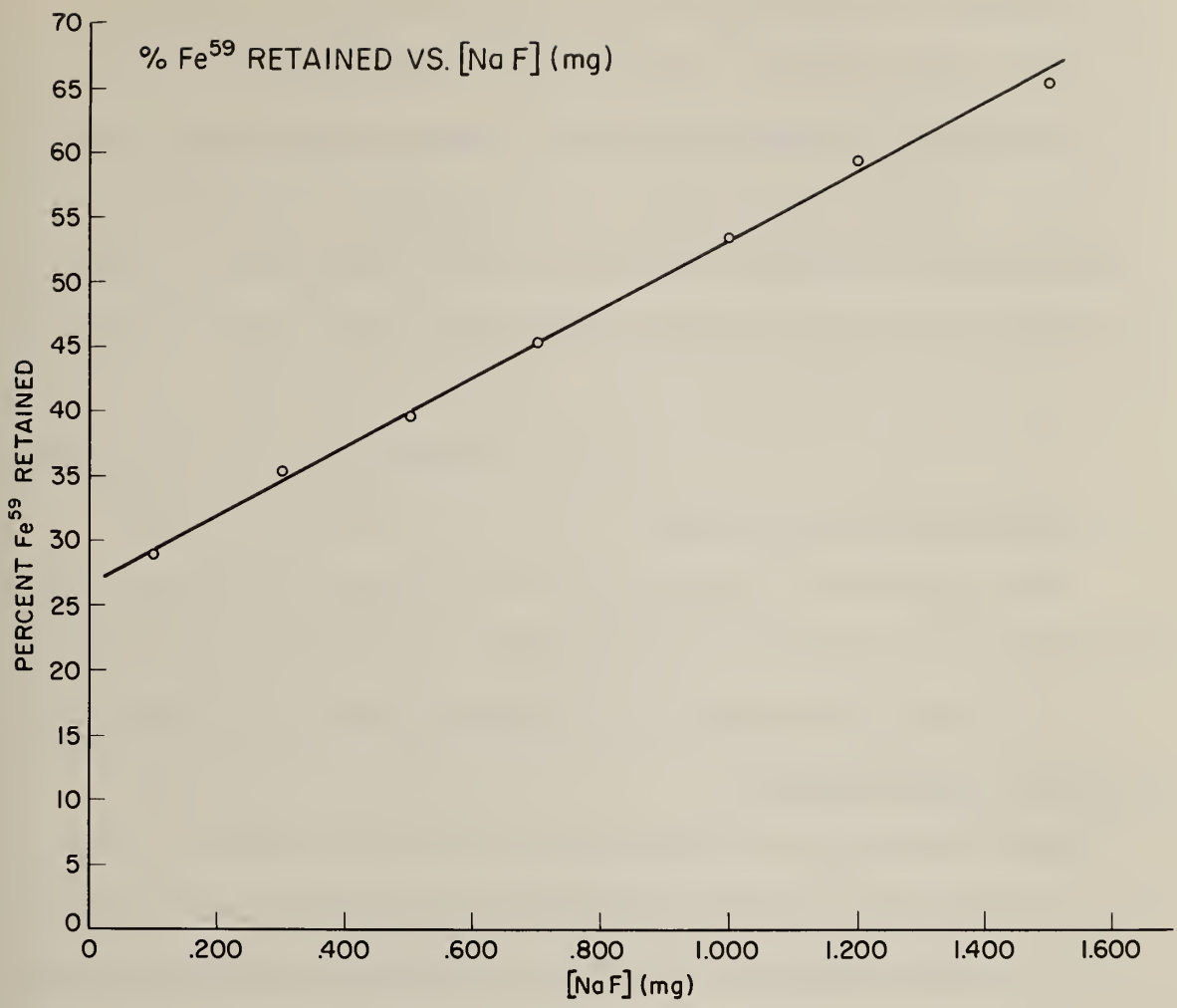

Figure 43. Distribution coefficient versus negative log of the concentration of sodium fluoride expressed in mole liter^{-1}.

Fe(III) = 1.0×10^{-3} M in 0.01 M $HClO_4$

SCN^- = 0.10 M

pH = 2.0

concentration range 0.100 to 1.500 milligrams of sodium fluoride. The analytical application of this curve was investigated as a possible method for the determination of fluoride. It was found that the response of 2.00% Fe^{59} retained in the aqueous phase per 0.100 milligram of sodium fluoride does not merit consideration as an analytical method for accurate and precise work.

(P. A. Pella and A. R. Landgrebe)

E. Abstract of Publication

The following is an abstract of a manuscript presented at the IAEA conference on Radiochemical Methods of Analysis.

1. Trace Determination of Cobalt by Substoichiometric and Radiometric Methods

Landgrebe, A. R., McClendon, L. T., and DeVoe, J. R., "Substoichiometric Radiometric Analysis: Determination of Trace Amounts of Cobalt", International Conference of Radiochemical Methods of Analysis, Oct. 1965, to be published.

"This analytical method is part of a general program at the National Bureau of Standards which utilizes radioisotopic tracers for the analysis of impurities in highly purified materials. Substoichiometric radiometric analysis is a modification of the isotopic dilution method of Ruzicka and Stary. In substoichiometric isotopic dilution analysis, equal number of atoms must be isolated from the system, while in radiometric analysis the amount isolated need have only a

known relation to the initial concentration. In order to isolate the same amount, or an amount proportional to the initial concentration, many side reactions such as hydrolytic reactions of the complexing agent and of the metal ion, formation of the acid or basic chelate compounds other than the desired one, competing side reactions of the complexing agent with other ions present, and the reaction of metal ions with buffering and masking substances must be controlled.

"Two procedures of analysis (column and batch) were developed using substoichiometric amounts of EDTA. The excess cobalt ions were removed from solution with a cationic ion exchanger in the sodium form.

"Experiments were performed to determined the effect of contact time, pH, ionic strength and buffers on the sensitivity of the method. Buffering solutions investigated were sodium acetate, ammonia-ammonium chloride, trisodium phosphate and diethylamine. The method gave reproducible results with an acetate buffer for the concentration range of 10 μg/ml to 0.1 μg/ml of cobalt. With diethylamine buffer preliminary results appear to be meaningful at the ng/ml level. The concentration range investigated using diethylamine buffer was from 5×10^{-3} M to 5×10^{-10} M cobalt using batch experiments in which one gram of Dowex 50-X8, 20-50 mesh was equilibrated with 10 ml of aqueous solution containing a substoichiometric amount of EDTA but an amount greater than the total cobalt concentration.

"Another application of this method includes the measurement of specific activities of radioisotopes. Measurement of Co-60 obtained from ORNL has been done. It will be shown that substoichiometric isotopic dilution analysis is the limiting case of a more general method which is called, for want of a better name, substoichiometric radiometric analysis."

(A. R. Landgrebe, L. T. McClendon and J. R. DeVoe)

6. MISCELLANEOUS

A. Sealed Source Fabrication

It is often desirable to have radioactive sources of certain isotopes to obtain spectroscopic data on photopeak efficiencies, resolution, peak locations, and other performance data on various radiation measuring devices. The following paragraphs describe a fabrication technique for such sources. The sources should be mounted on a material of low atomic number which is durable. They must be thin yet rigid enough to maintain a reproducible geometry each time the source is positioned in its holder for counting. To filfill this requirement a piece of 1/32" plexiglass, cut to the desired size, is taken as a base material. An aluminum disk, 1" in diameter and .005" thick, is used as a backing for the deposited source material. After drying under an infra-red heat lamp the radioactive area is sprayed with a clear vinyl lacquer. A piece of adhesive plastic film, commercially available for the purpose of laminating identification cards and photographs, is cut to the same dimensions as the base. The disk is then positioned at the desired location on the adhesive material. At this time a radiation label or any other identifying label can be added, taking care to allow a 1/8" border to insure a positive seal. The adhesive film is then alined with the base and firmly pressed into place (figure 44). The point of adhesion should be traced with a smooth, hard object such as the beaded end

of a glass stirring rod to insure a tight seal. The edges can be trimmed as needed to complete the source.

The attenuation of 88 keV X- or gamma-rays by the 1/32" Plexiglas base is less than 2%. No significant difference in the backscatter peak has been observed, due to the 0.005 inch thick aluminum planchet.

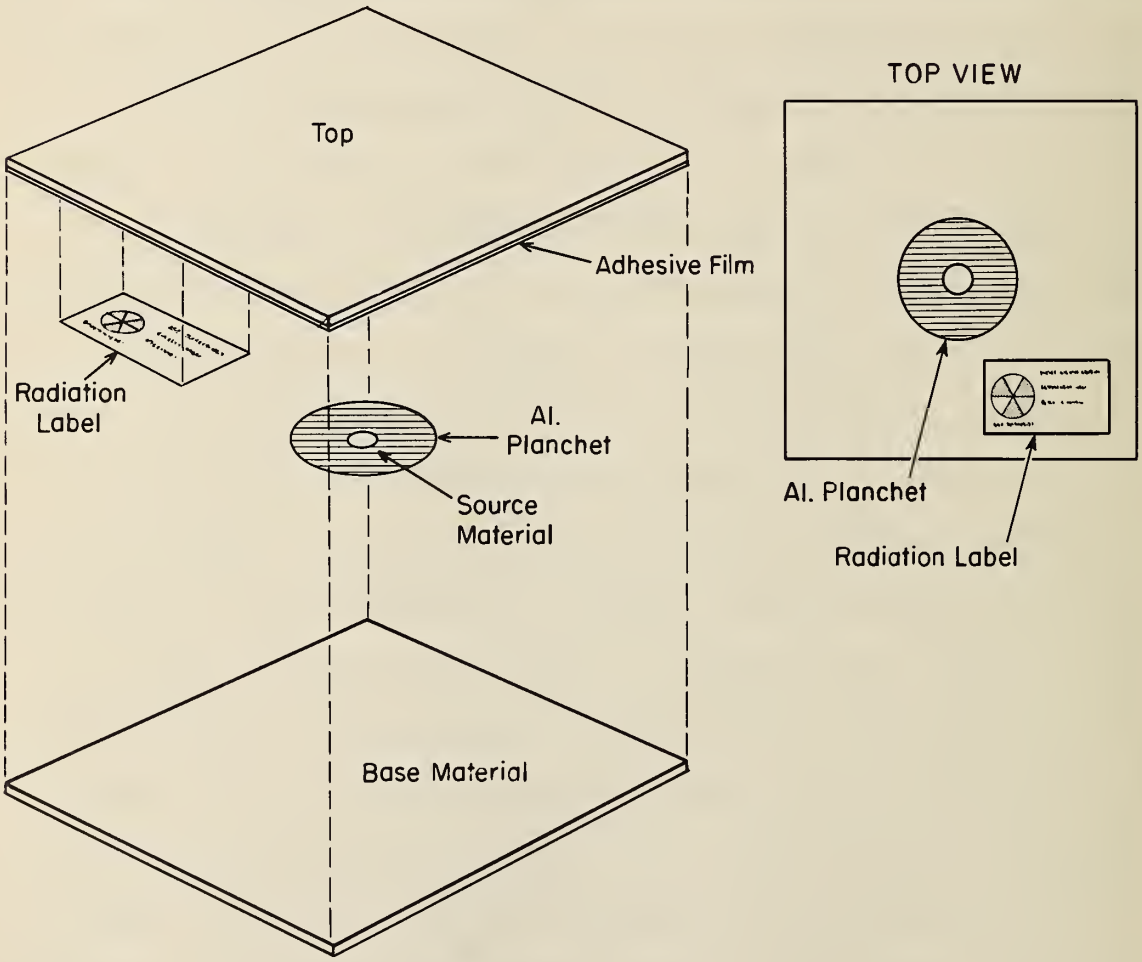

Figure 44. Exploded view of source assembly.

Although the finished source, by design, is fairly rigid, a degree of flexibility remains so that under normal handling conditions it will not be damaged. The labels are located within the sandwich and will remain legible for the life of the source. It is expected that radiation damage form beta and gamma sources normally used in spectrometer calibration will be negligible over long periods of time.

The shelf life of these sources is not known, but several microcurie sources of Cs^{137} have been used in our laboratory for six months with no apparent degradation.

The fabrication time of the source is approximately five minutes, exclusive of the evaporation time of the solution, and the material cost is negligible.

(F. A. Lundgren and G. W. Smith)

7. PERSONNEL

Radiochemical Analysis, J. R. DeVoe, Section

Activation Analysis

D. A. Becker
B. S. Carpenter
F. A. Lundgren
W. P. Reed
G. L. Rhinehart
G. W. Smith
G. J. Lutz
J. M. English - Terminated - Summer student
R. G. Keenan - Terminated - Guest worker from U.S. Public Health Service Cincinnati, Ohio
J. H. Marcus - Terminated
K. H. Miller - Terminated - Summer student

Instrumentation

W. N. Bettum
R. W. Shideler
A. J. Gerber - Terminated

Mössbauer Effect

W. L. O'Neal
F. C. Ruegg
D. K. Snediker
J. J. Spijkerman
L. A. Lynch - Terminated - Summer student

Radioisotope Tracer Techniques

T. E. Gills
A. R. Landgrebe
L. T. McClendon
P. A. Pella

8. ACKNOWLEDGMENTS

The Radiochemical Analysis Section wishes to thank Dr. J. Elliot, Mr. E. Nowstrop and Mr. L. Harris of the Naval Research Laboratory Reactor Facility for making the irradiation of samples possible. We also wish to acknowledge the assistance of the NBS Health Physics staff who have helped us with the safe handling of these samples.

We also wish to express our thanks to Dr. C.O. Muehlhause, Dr. R. S. Carter, and Dr. H. H. Landon for their cooperation in making arrangements for our use of the new facilities in the NBS Reactor Building. Further, the assistance of Dr. J. E. Leiss, Dr. S. Penner and Mr. O. Spokas of the Radiation Physics Division for arrangements to use the LINAC facilities is acknowledged. We also wish to acknowledge the assistance of Mr. Goetz, Chief, as well as Mr. H. J. Rouse and Mr. T. B. McKneely, Jr., of the Plant Division, NBS. The section acknowledges Mrs. R. S. Maddock for her assistance in preparing this report.

Special appreciation is expressed to Mrs. M. Fenstermaker who typed the entire report and whose tireless efforts as section secretary has made our entire operation more efficient and effective.

9. REFERENCES

[1] Cumming, J. B., Applications of Computers to Nuclear and Radiochemistry, "CLSQ, The Brookhaven Decay Curve Analysis Program", National Academy of Sciences NAS-NS 3107, October 1962.

[2] Gardner, D. G., Gardner, J. C., Laush, G., and Meinke, W. W., "Analysis of Multicomponent Decay Curves by Use of Fourier Transforms", J. Chem. Phys. 31, 978 (1959).

[3] Watt, B. E., Reactor Handbook, Physics, USAEC, McGraw-Hill Co., New York, 1955 p. 621.

[4] Isenhour, T. L. and Morrison, G. H., Anal. Chem. 36, 1089 (1964).

[5] Symposium on Applications of Computers to Nuclear and Radiochemistry, National Academy of Sciences NAS-NS 3107, March 1963.

[6] Nicholson, W. L., Schlosser, J. E., and Brauer, F. P., Nuclear Instruments and Methods 25, 45 (1963).

[7] Connally, R. E., Rev. Sci. Inst. 24, 458 (1953).

[8] Perkin, R. W., "Selective and Sensitive Analysis of Activation Products by Multidimensional Gamma Ray Spectrometry", Proceedings of International Conference "Modern Trends in Activation Analysis" Symposium, College Station, Texas, April 1965, to be published.

[9] Goldanski, V. I., The Mössbauer Effect and its Applications in Chemistry, Consultants Bureau, New York, 1964.

[10] Wertheim, G. K., Mössbauer Effect - Principles and Applications, Academic Press, New York, 1964.

[11] Danon, J., Mössbauer Effect and Chemical Bonding in Transition Metal Complexes, Proceedings of the Panel on the Use of the Mössbauer Effect in Chemistry and Solid State Physics, International Atomic Energy Agency, Vienna, April 1965.

[12] Herber, R. H., J. Chem. Ed. 42, 180 (1965).

[13] Christ, B. W., Spijkerman, J. J., Giles, P. M., and Ruegg, F. C., "Retained Austenite in 10105 Steel Detected by Mössbauer Spectroscopy", Letter to editor, Acta Metallurgica, to be published.

[14] Spijkerman, J. J., Ruegg, F. C., and DeVoe, J. R., "Standardization of the Differential Chemical Shift for Fe57", Mössbauer Effect Methodology, Vol. 1, Plenum Press, New York, to be published.

[15] Ruegg, F. C., Spijkerman, J. J., DeVoe, J. R., Rev. Sci. Inst. 36, 356 (1965).

[16] Morokuma, T., Oyo Buturi 31, 192 (1962).

[17] Hara, K., Smith, D. S., Rev. Sci. Inst. 30, 8 (1959)

[18] Peck, E. R., Obetz, W. S., J. Opt. Soc. Am. 43, 6 (1953).

[19] Saunders, J. B., J. Res. N. B. S. 58, 21 (1957).

[20] Herber, R. H., Private Communication.

[21] Herber, R. H., and Spijkerman, J. J., "Mössbauer Line Broadening in SnO_2", J. Chem. Phys. 42, 4312, (1965).

[22] Flinn, P. A. and Ruby, S. L., Rev. Mod. Phys. 36, 352 (1964).

[23] Ruzicka, J. and Stary, J., Talanta, 8, 228 (1961).

[24] Ruzicka, J. and Stary, J., Talanta, 8, 296 (1961).

[25] Ruzicka, J. and Stary, J., Talanta, 8, 535 (1961).

[26] Ruzicka, J. and Stary, J., Talanta, 8, 775 (1961).

[27] Connally, R. E., and Scott, F. A., "Hanford Controlled Potential Coulometer", AEC Report HW-65919 (1960).

[28] Hevesy, G. and Hobbie, R., Z. Analyt. Chem. 88, 1 (1932).

[29] Ruzicka, J. and Stary, J., Talanta 9, 617 (1962).

[30] Ruzicka, J. and Stary, J., Talanta 9, 905 (1963).

[31] Ruzicka, J. and Stary, J., Talanta 9, 697 (1964)

[32] Morrison, G. H., Freiser, H., "Solvent Extraction in Analytical Chemistry", John Wiley & Sons, Inc., New York, 1957, pp. 135-137.

[33] Babko, A. K., Kleiner, K. E., J. Gen. Chem. (U.S.S.R.) 17, 1259 (1947).

U.S. DEPARTMENT OF COMMERCE
WASHINGTON, D.C. 20230

OFFICIAL BUSINESS

POSTAGE AND FEES PAID
U.S. DEPARTMENT OF COMMERCE